User's Guide for the KODAK 6900 Photo Printer and the KODAK MOMENTS 6950 Photo Printer

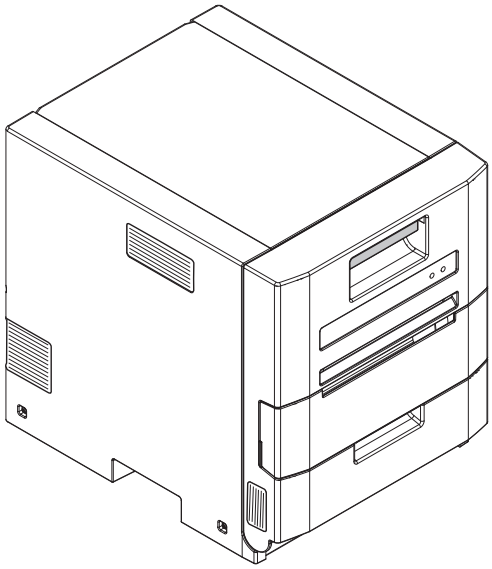

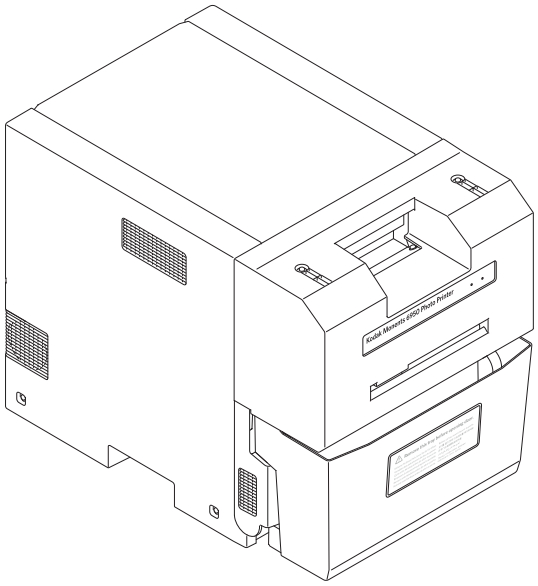

April 2025

Table of Contents

1 Overview

System Requirements 1-1
Printer Specifications 1-1
Compatible Print Sizes for the 6950 Photo Printer 1-3
Compatible Print Sizes for the 6900 Photo Printer 1-4
Printer Supplies 1-5
Paper and Ribbon 1-5
Thermal Printer Cleaning Kit 1-6
Packing and Transporting the Printer 1-7
Getting Help 1-7
Online User Guide 1-7

2 Setting Up the Printer

Identifying Printer Parts - 6900 Printer 2-1
Identifying Printer Parts - 6950 Printer 2-2
Preparing the Printer for Use 2-3
Installing the Printer with the Optional Booster 2-3
Installing the 6950 Printer without the Optional Booster 2-5
Installing the Trim Tray 2-7
Removing the Trim Tray 2-8
Installing the Optional Print Bin 2-8
Connecting the Power Cord and the USB Cable 2-9
Turning On the Printer 2-10
Handling and Storing the Paper and Ribbon 2-10
Loading the Paper 2-11
Loading the Ribbon 2-18
Starting the Software Operator Control Panel 2-23
Making a Status Print 2-24

3 Maintaining the Printer

Performing Routine Maintenance 3-1
Cleaning the Exterior 3-1
Cleaning the Thermal Print Head and the Peel Roller 3-2
Cleaning the Platen and Pinch Rollers 3-4
Cleaning the Cleaning Roller 3-7

4 Operating the Printer

Making Prints 4-1
Handling and Storing Prints 4-1
Operator Panel Lights 4-2
Printer Settings 4-3

5 Troubleshooting

Resolving Operator Panel Status/Error Messages 5-2
Clearing a Paper Jam 5-4
Clearing a Slitter Jam from the 6950 Printer 5-8
Repairing a Damaged Ribbon 5-11
Recovering from a Power Interruption 5-14

Appendix A: KODAK MOMENTS 6950 Photo Printer Trim Tray Utility

Using the Trim Tray Utility A-1

Appendix B: Safety and Regulatory Information

Important Safety Information B-1
Safety Labels B-2
Acoustic Level B-4
Disposal B-4
EU Reach B-5
EU Simplified Declaration of Conformance B-5

Appendix C: Regulatory Compliance

United States C-1
Canada C-1
Korea C-1
China C-2
China RoHS C-2
Brazil C-3

1 Overview

The KODAK 6900 Photo Printer / KODAK MOMENTS 6950 Photo Printer is a roll-fed printer that:

- Uses thermal dye-sublimation technology
- Provides a printing resolution of 300 dpi, continuous tone
- Produces single-sided prints in landscape, portrait, and square layouts
- Offers satin and glossy finishes
- Has a cutter that cuts the paper horizontally

The 6950 Printer has two slitters that cut the paper vertically.

System Requirements

- The printer shall operate to specification if the host system meets or exceeds the MICROSOFT WINDOWS 10 32-bit system requirements
- USB High Speed (2.0) compliant host device

Printer Specifications

6900 Dimensions	Width	29 cm (11.42 in.)
	Width, with booster	30.5 cm (12.01 in.)
	Depth	37.5 cm (14.76 in.)
	Depth, with print bin	54.68 cm (21.53 in.)
	Depth with booster	48.0 cm (18.9 in.)
	Depth, with print bin and booster	64.49 cm (25.39 in.)
	Height	34.5 cm (13.58 in.)
	Height, with booster	42.05 cm (16.56 in.)
6900 - Weight, without ribbon and paper		17.46 kg (38.5 lbs)

6950 Dimensions	Width	29 cm (11.42 in.)
	Width, with booster	30.5 cm (12.01 in.)
	Depth	46 cm (18.11 in.)
	Depth, with print bin	62.64 cm (24.66 in.)
	Depth, with booster	48.28 cm (19.01 in.)
	Depth, with print bin and booster	64.93 cm (25.56 in.)
	Height	34.5 cm (13.58 in.)
	Height, with booster	42.05 cm (16.56 in.)
6950 - Weight, without ribbon and paper		18.7 kg (41.22 lbs)
Operating environment	Temperature	15 to 35° C (59 to 95° F)
	Relative humidity	20 to 90% non condensing
Power voltage/frequency (auto detection in the prescribed range)		100-240 V / 50-60 Hz
Power consumption		Less than 5.0 Amps at 100V AC or 2.3 Amps at 240V AC

Compatible Print Sizes for the 6950 Photo Printer

The 6950 WINDOWS Print Driver supports 6R media only. It does not support 5R media, 5R panoramic prints, or any bordered sizes.

6950 Stand Alone WINDOWS Print Driver supported page sizes
2 x 6 in. (5.1 x 15.2 cm) borderless
3 x 6 in. (7.6 x 15.2 cm) borderless
3.5 x 5 in. (8.9 x 12.7 cm) borderless
4 x 6 in. (10.2 x 15.2 cm) borderless
5 x 5 in. (12.7 x 12.7 cm) borderless
5 x 7 in. (12.7 x 17.8 cm) borderless
6 x 6 in. (15.2 x 15.2 cm) borderless
6 x 8 in. (15.2 x 20.3 cm) borderless
6 x 12 in. (15.2 x 30.5 cm) borderless
6 x 14 in. (15.2 x 35.6 cm) borderless
6 x 18 in. (15.2 x 45.7 cm) borderless
6 x 20 in. (15.2 x 50.8 cm) borderless

6950 Slit Print Sizes
2.95 x 2.95 in. (7.5 x 7.5 cm)
3.25 x 2.75 in. (8.3 x 6.98 cm)
3.5 x 3.5 in. (8.89 x 8.89 cm)
3.5 x 5 in. (8.89 x 12.7 cm)
4 x 3.35 in. (10.16 x 8.47 cm)
5 x 5 in. (12.7 x 12.7 cm)
5 x 7 in. (12.7 x 17.8 cm)

Compatible Print Sizes for the 6900 Photo Printer

6900 Stand Alone 6R Supported Print sizes
2 x 6 in. (5.1 x 15.2 cm) borderless
3 x 6 in. (7.6 x 15.2 cm) borderless
4 x 6 in. (10.2 x 15.2 cm) borderless
4 x 6 in. (10.2 x 15.2 cm) bordered
6 x 6 in. (15.2 x 15.2 cm) borderless
6 x 6 in. (15.2 x 15.2 cm) bordered
6 x 8 in. (15.2 x 20.3 cm) borderless
6 x 8 in. (15.2 x 20.3 cm) bordered
6 x 12 in. (15.2 x 30.5 cm) borderless
6 x 14 in. (15.2 x 35.6 cm) borderless
6 x 18 in. (15.2 x 45.7 cm) borderless
6 x 20 in. (15.2 x 50.8 cm) borderless

6900 Stand Alone 5R Supported Print sizes
3.5 x 5 in. (8.89 x 12.7 cm) borderless
5 x 5 in. (12.7 x 12.7 cm) borderless
5 x 5 in. (12.7 x 12.7 cm) bordered
5 x 7 in. (12.7 x 17.8 cm) borderless
5 x 7 in. (12.7 x 17.8 cm) bordered
5 x 10 in. (12.7 x 25.4 cm) borderless
5 x 15 in. (12.7 x 38.1 cm) borderless
5 x 20 in. (12.7 x 50.8 cm) borderless

Printer Supplies

Contact your local distributor for information on ordering supplies.

Paper and Ribbon

Paper and ribbon are sold separately.

IMPORTANT: *For best results, replace the paper and ribbon at the same time. Used ribbon is safe for land-fill disposal. Do not recycle used ribbon.*

KODAK Photo Print Kit 6900 / 6800 / 6R Specifications	
Storage specifications	40-85° F (5-30° C) 60% relative humidity or lower
Capacity*	750 - 4 x 6 in. (10 x 15 cm) prints, paper, and ribbon** or 375 - 6 x 8 in.(15 x 20.3 cm) prints, paper, and ribbon**
Paper and ribbon width	6 in. (15 cm)
Ribbon patch length	8 in. (20.3 cm)

* The paper roll contains a small amount of additional paper to allow for the extra feed when loading the paper.

** Paper and ribbon rolls contain material to make the stated print quantity. Actual number of prints will vary depending on mix of 6 x 8 in. and 4 x 6 in. prints produced.

KODAK Photo Print Kit 6900 / 6800 / 5R Specifications	
Storage specifications	40-85° F (5-30° C) 60% relative humidity or lower
Capacity*	750 - 3.5 x 5 in. (8.9 x 12.7 cm) prints, paper, and ribbon** or 375 - 5 x 7 in.(12.7 x 17.8 cm) prints, paper, and ribbon**
Paper and ribbon width	5 in. (12.7 cm)
Ribbon patch length	8 in. (20.3 cm)

* The paper roll contains a small amount of additional paper to allow for the extra feed when loading the paper.

** Paper and ribbon rolls contain material to make the stated print quantity. Actual number of prints will vary depending on mix of 3.5 x 5 in. and 5 x 7 in. prints produced.

Thermal Printer Cleaning Kit

Use the KODAK Thermal Printer Cleaning Kit when performing routine maintenance on the printer (see page 3-2).

KODAK Thermal Printer Cleaning Kit	
Catalog Number	172-1117
Contents	10 individually packaged alcohol pads

CAUTION:
Alcohol is a flammable liquid. It can cause eye irritation and dry skin. Wash your hands with soap and water following any maintenance procedures where you use alcohol pads.

Packing and Transporting the Printer

CAUTION:
The 6900 Printer weighs approximately 17.46 kg (38.5 lbs). The 6950 Printer weight 18.7 kg (41.22 lbs). Use caution when moving the printer. Shipping the printer with paper and ribbon installed can cause damage to the printer.

1. Remove the paper and ribbon from the printer.
2. Remove the:
   - print bin - if installed
   - trim tray
3. Repack the printer, trim tray, and print bin in the original packing box. See the packing/unpacking instructions included with the box.

Getting Help

Help with your printer is available from the following sources:

- "Chapter 5 Troubleshooting" in this user's guide
- Service and Support

Online User Guide

For the latest user guides:

1. Go to www.kodakalaris.com/go/printerupdates.
2. Select:
   - **Standalone Printers**
   - the KODAK 6900 Photo Printer or KODAK MOMENTS 6950 Photo Printer from the drop-down menu
   - the document that you wish to view from the drop-down menu
   - your language
3. Click the link for the guide.

Note: The Guides are in PDF format; ADOBE ACROBAT Reader is required to read them. Follow the on-screen directions to install ADOBE ACROBAT Reader if you do not already have it installed on your system.

2 Setting Up the Printer

Identifying Printer Parts - 6900 Printer

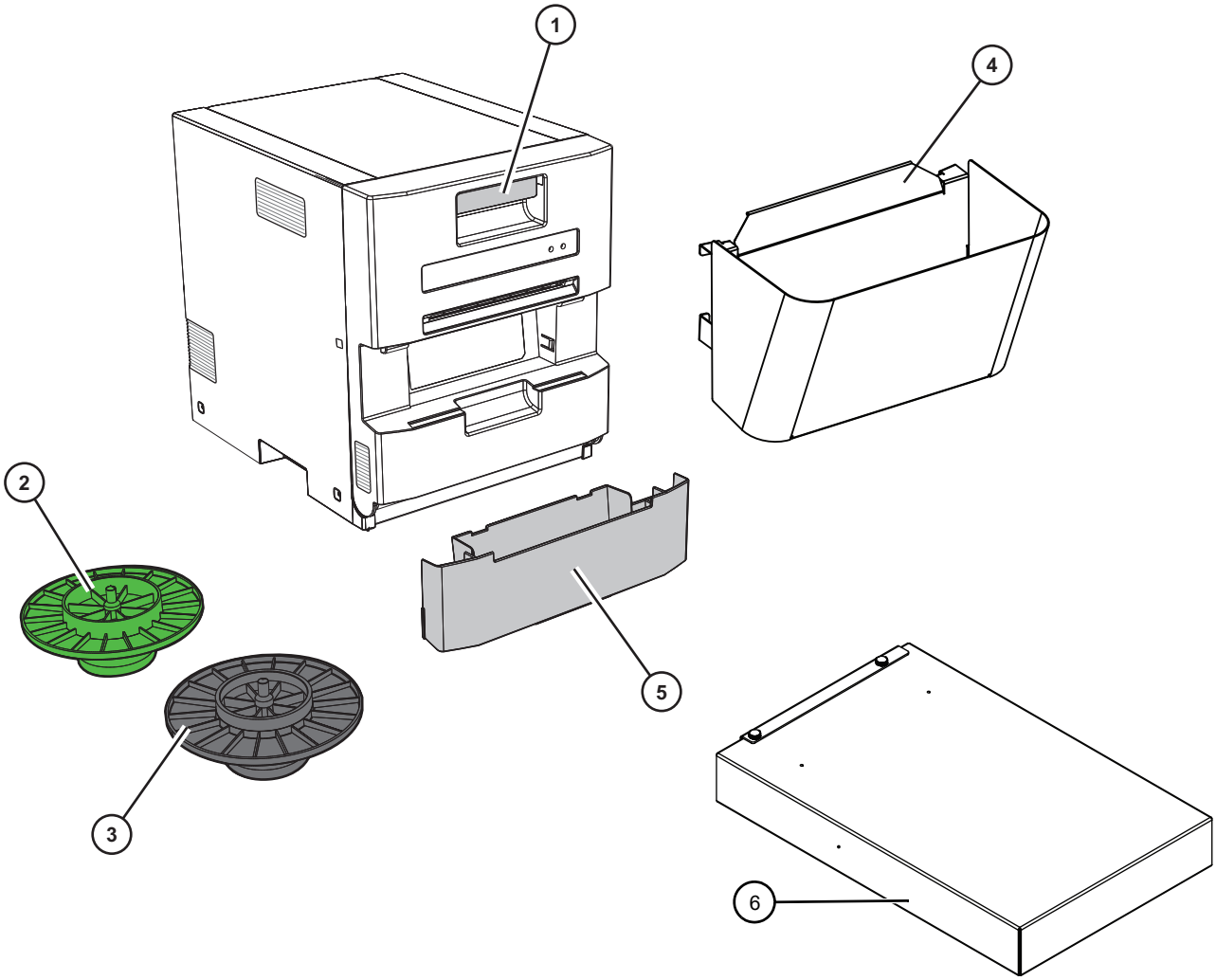

1. Door latch
2. Paper flange with gear (light green)
3. Paper flange without gear (black)
4. Optional Print Bin
5. Trim Tray
6. Optional Booster

Identifying Printer Parts - 6950 Printer

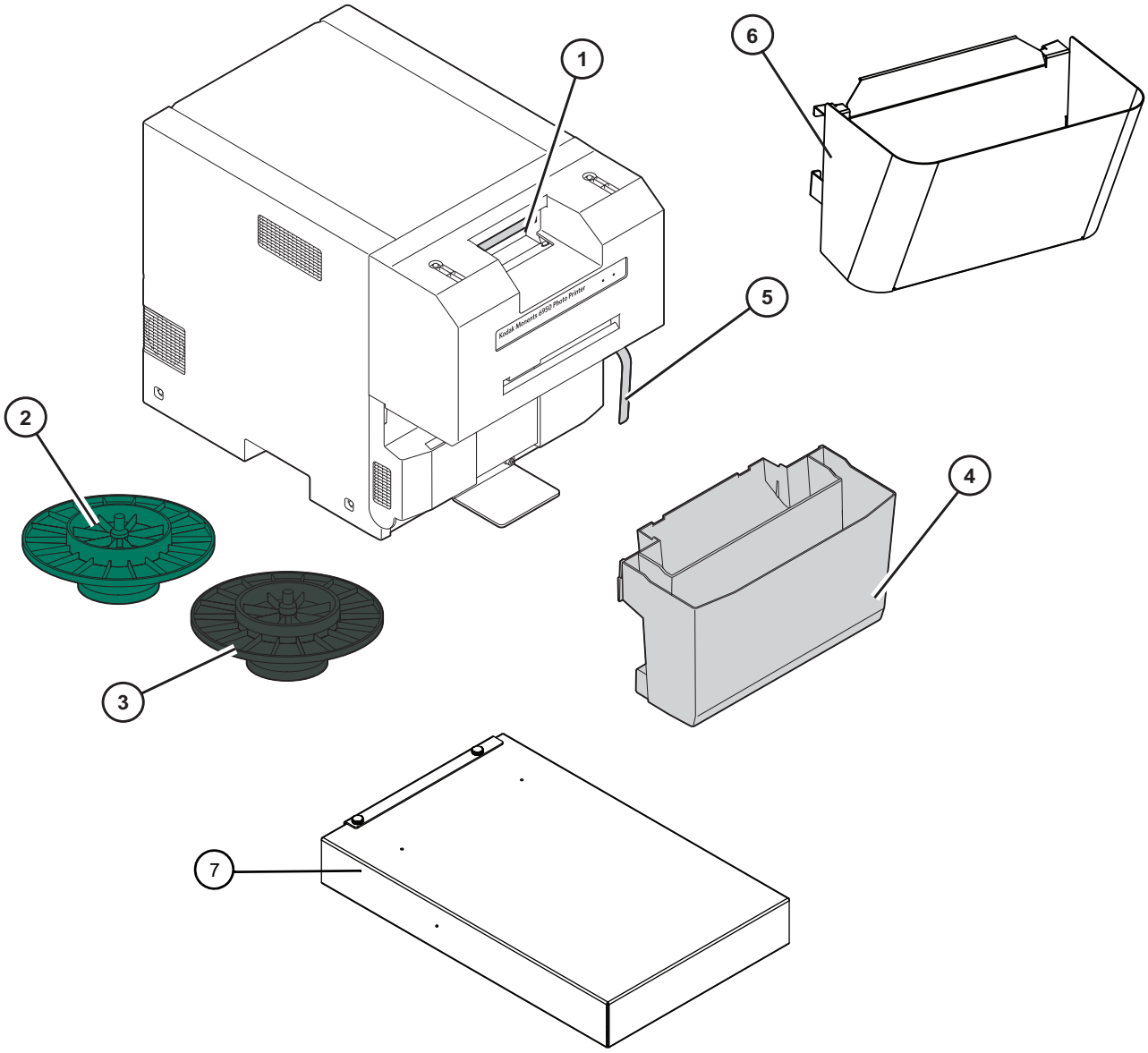

1. Door latch
2. Paper flange with gear (dark green)
3. Paper flange without gear (dark gray)
4. Trim tray
5. Diverter
6. Optional Print Bin
7. Optional Booster

Preparing the Printer for Use

CAUTION:
The 6900 Printer weighs approximately 17.46 kg (38.5 lbs). The 6950 Printer weighs 18.7 kg (41.22 lbs). Use caution when moving the printer.

Note: Keep the carton and packaging in case you ever need to transport the printer.

Installing the Printer with the Optional Booster

Complete these steps only if you are installing the printer with the optional booster.

1. Remove from the booster:
   - 3 thumbscrews
   - Bracket

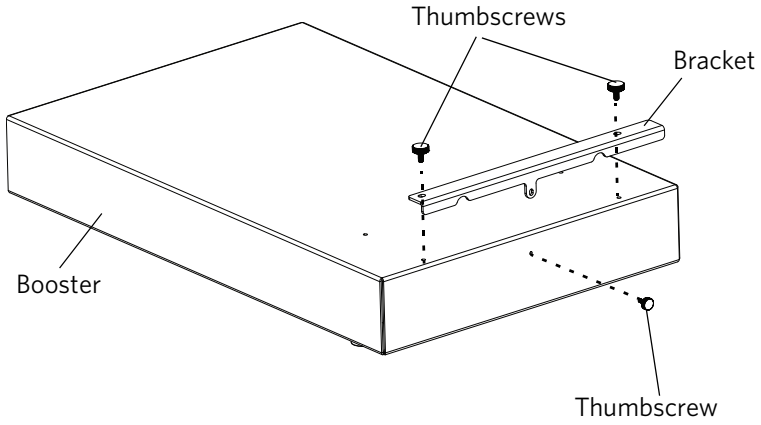

2. Place the booster in the appropriate location.

CAUTION:
The 6900 Printer weighs approximately 17.46 kg (38.5 lbs). The 6950 Printer weighs 18.7 kg (41.22 lbs). Use caution when moving the printer.

3. Place the printer on top of the booster:
   - If you have a 6900 Printer, align the back of the printer with the first set of holes on the booster.
   - If you have the 6950 Printer, align the back of the printer with the second set of holes.

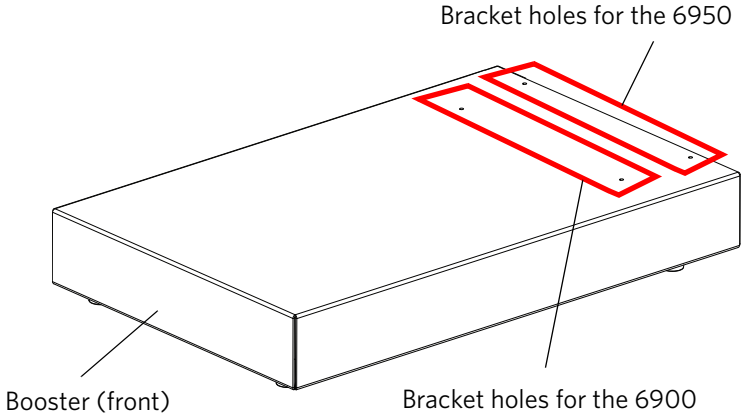

4. If you have the 6900 Printer, install the bracket and three thumbscrews.

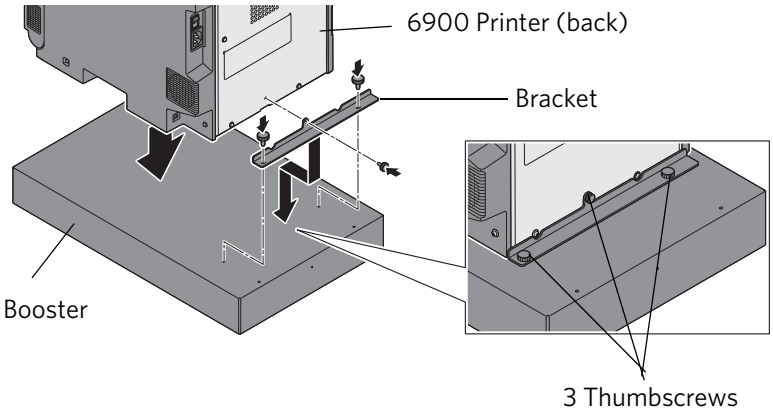

5. If you have the 6950 Printer, install the bracket and three thumbscrews.

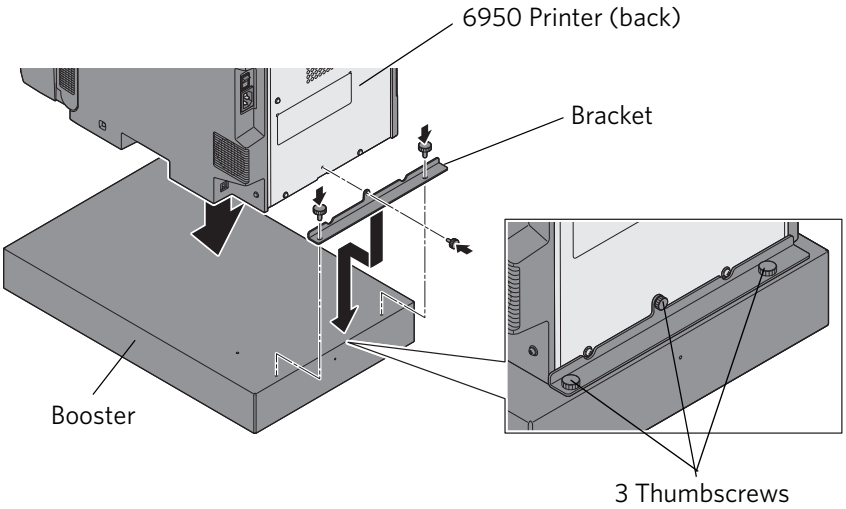

Installing the 6950 Printer without the Optional Booster

Complete these steps only if you have a 6950 Printer. To prevent tipping, make sure that you install the rear bracket on the printer. If you are installing the printer in a KODAK MOMENTS Cabinet, follow the instructions packed with the cabinet.

CAUTION:
The 6950 Printer weight 18.7 kg (41.22 lbs). Use caution when moving the printer.

CAUTION:
TIPPING RISK—To prevent the 6950 Printer from tipping, make sure the front bracket does not overhang the edge of the table.

1. Place the printer in the appropriate location. Make sure that you place the printer on a table or counter top so that the front bracket does not overhang the edge of the table.

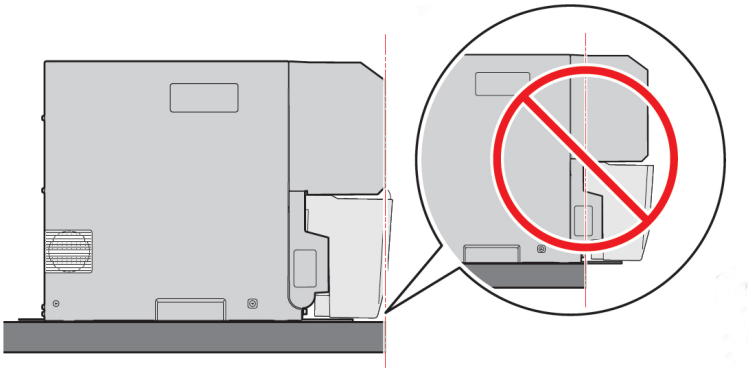

2. Install:
   - Rear bracket
   - 1 screw
   - 1 washer and screw

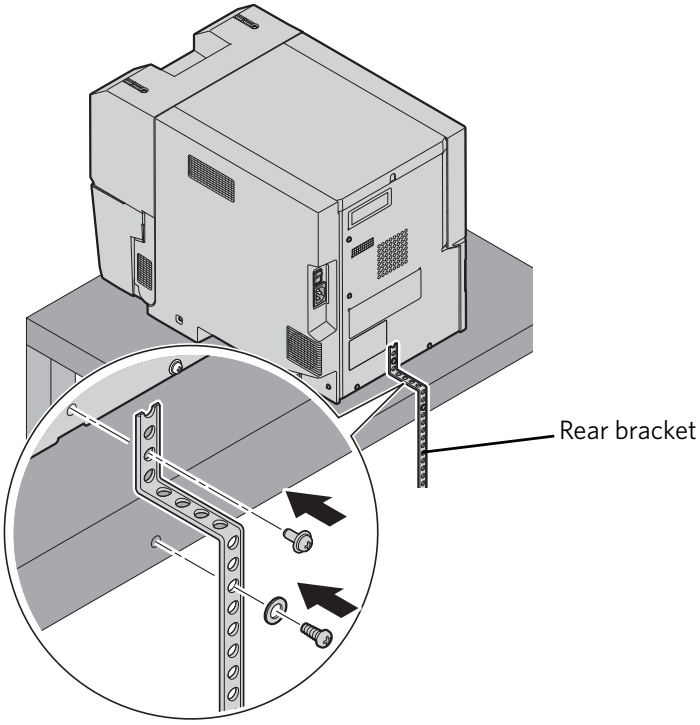

Installing the Trim Tray

1. Insert the trim tray on the front of the printer:
   - Tilt the top of the trim tray inward.
   - If you have the 6950 Printer, make sure that the diverter goes inside of the front compartment of the trim tray.
   - Push in the bottom of the trim tray.

Note: If the trim tray is not inserted properly, a paper jam can occur.

6900 Printer

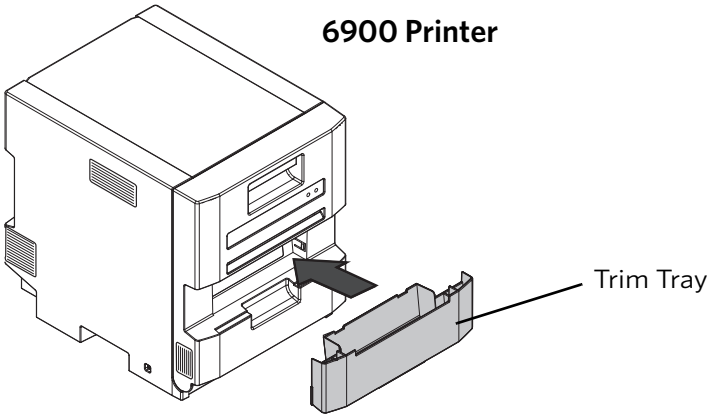

6950 Printer

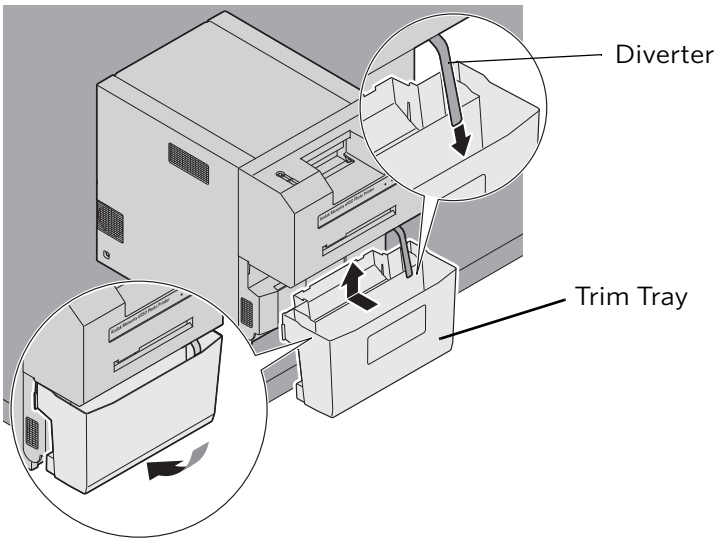

Removing the Trim Tray

1. Lift up on the bottom of the trim tray.
2. Pull the trim tray out from the front of the printer.

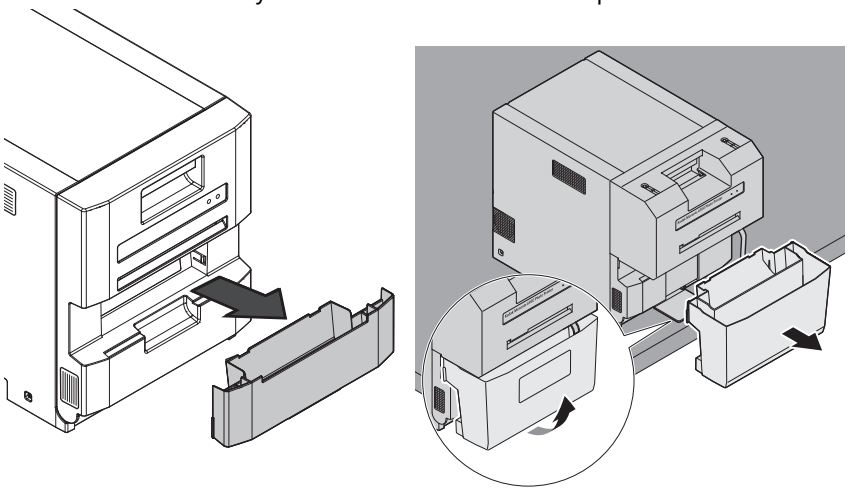

Installing the Optional Print Bin

1. Install the print bin on the front of the printer.

6900 Printer

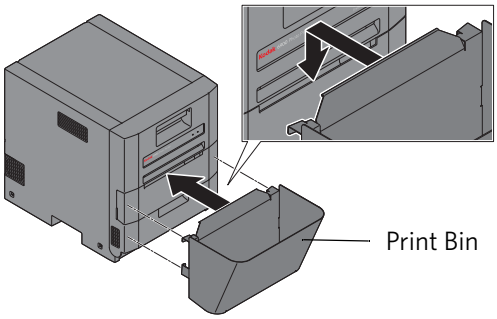

6950 Printer

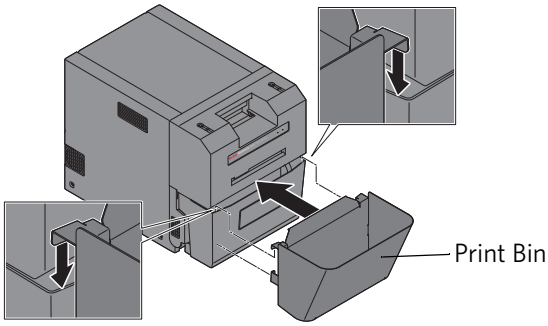

Connecting the Power Cord and the USB Cable

If you received more than one power cord with your printer, make sure to use the correct power cord for your region.

1. Move the power switch to the Off (○) position.

⚠ CAUTION:
The power outlet must be grounded. An ungrounded outlet can cause fire, electric shock, or harmful interference to nearby electrical devices.

2. Connect the power cord to the power connector on the back of the printer and to a grounded power outlet.

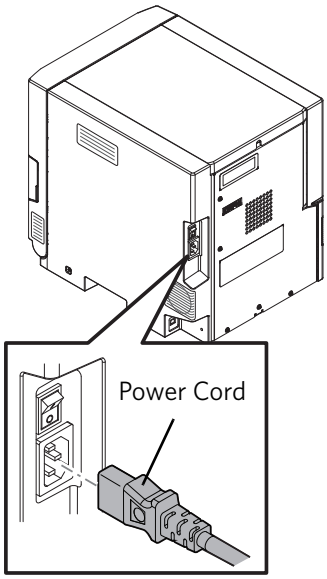

3. Connect the USB cable (not included) to the USB connector on the back of the printer and to the USB connector on the computer.

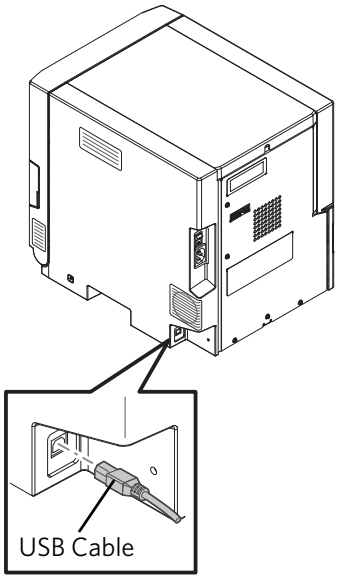

Turning On the Printer

Move the power switch to the On (|) position.

On the operator panel, the Power light illuminates.

To turn off the printer, move the power switch to the Off (◯) position.

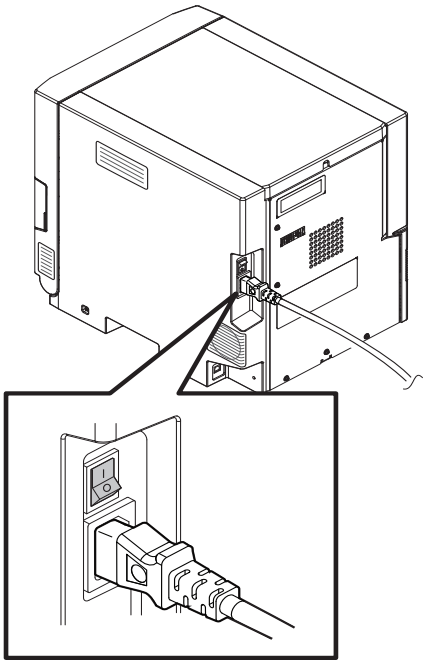

Handling and Storing the Paper and Ribbon

For the best quality prints, carefully handle and store the paper and ribbon.

- To avoid fingerprints, handle the ribbon by the spool ends and the paper by the edges. Do not touch the ribbon material or the glossy sides of the paper.
- Store the paper and ribbons away from direct sunlight, at a temperature of 30° C (86° F) or lower and a relative humidity of 60% or lower.

Loading the Paper

Make sure that you have the appropriate media kit available (see "Printer Supplies" on page 1-5).

1. Make sure that the power switch is in the On (|) position.
2. Remove the print bin (if installed).

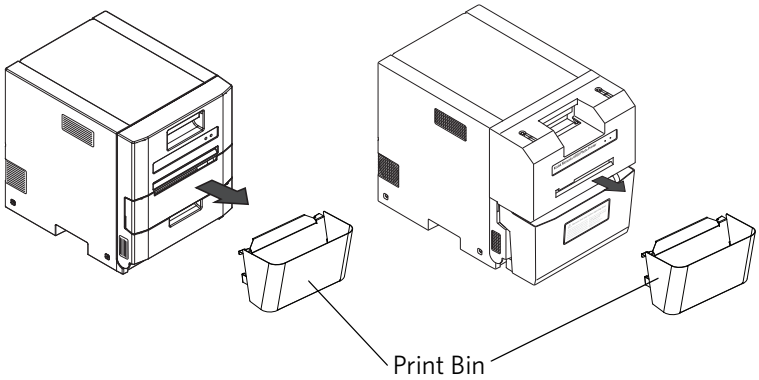

3. Remove and empty the trim tray.

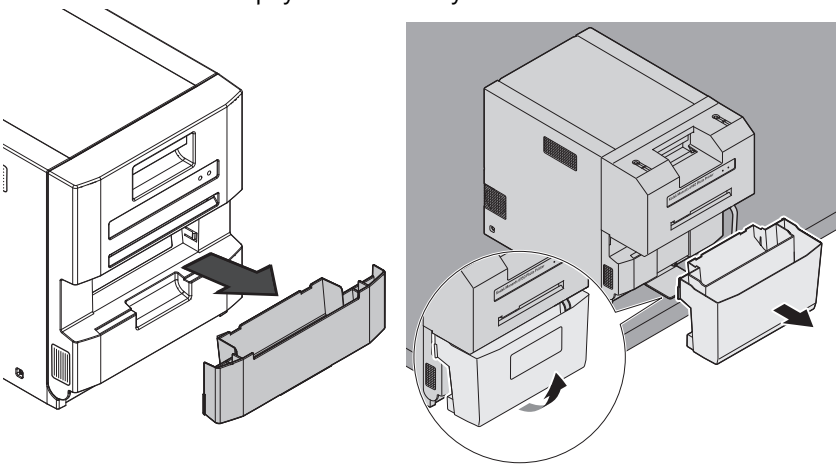

4. Pull the latch on the front door.

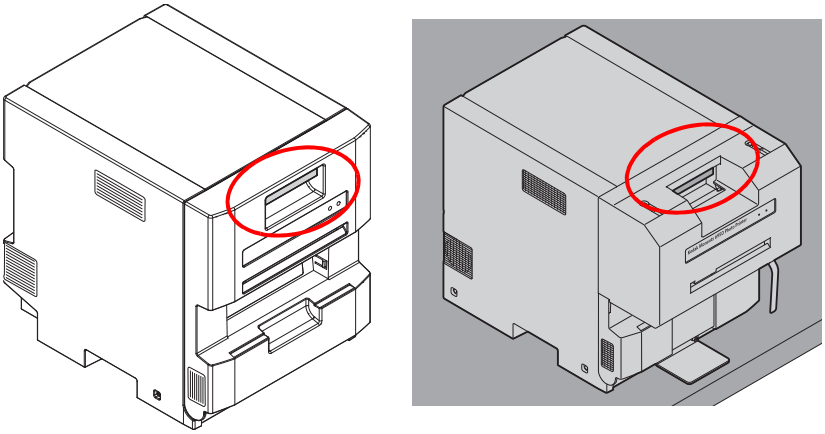

5. Carefully lower the door until it is fully open.

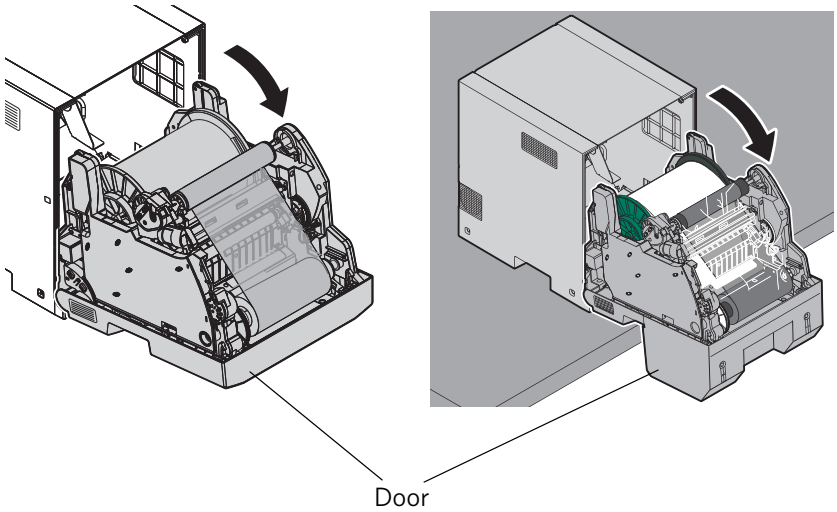

6. Remove the used ribbon.

Note: Images remain on the ribbon after printing. If you need to maintain confidentiality, dispose of the used ribbon appropriately.

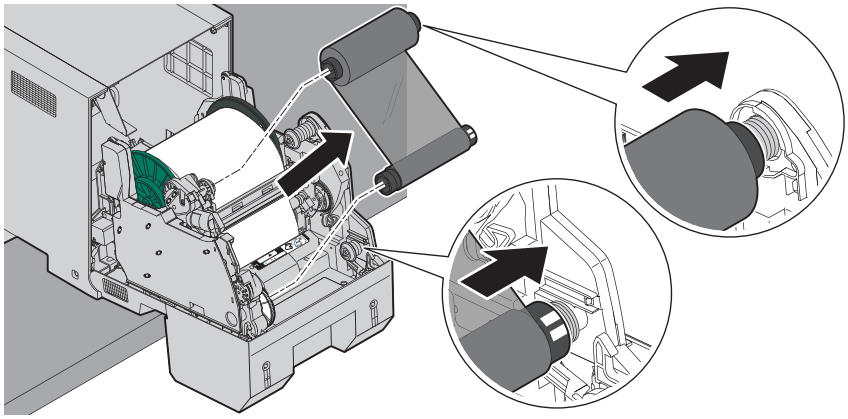

7. Remove the used paper roll.

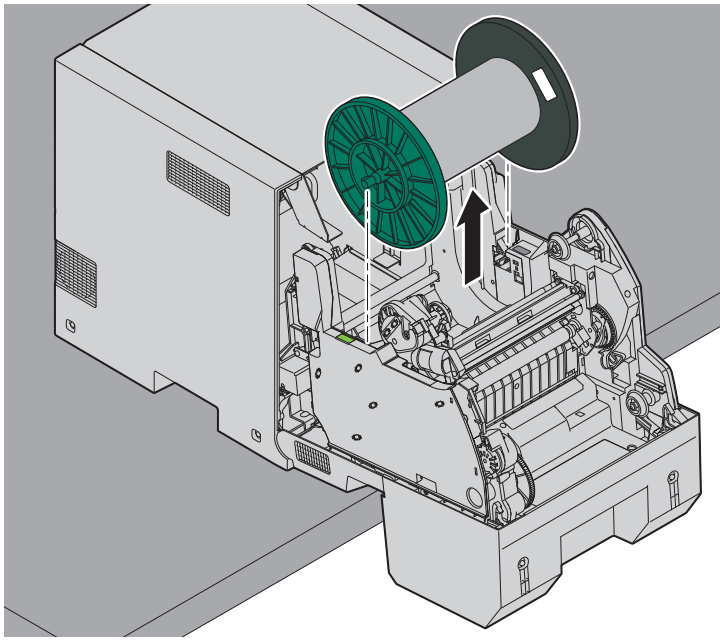

8. Remove the flanges from the used paper roll. Save the flanges.

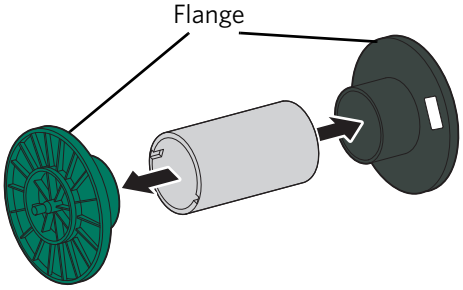

9. Remove the plastic wrapper from the new paper roll. Do not remove the tape from the new paper roll.

Important: *If you have a 6900 Printer and a 6950 Printer, the flanges are not interchangeable!*

	6950 Flanges	**6900 Flanges**
Flange Color	Green and Dark Gray	Green and Black
Number of lugs	1 lug on green flange	2 lugs on green flange
Code on the label of the flange	2XXXXXB – Seventh digit is B.	XXXXXXA - Seventh digit is the letter A.

10. Attach the paper flanges to each end of the paper roll.
    a. Align the lug(s) on the green paper flange with the notch(es) on the paper roll.

b. Insert green paper flange into the end of the paper roll.

c. Insert the black paper flange on the paper roll.

Note: If you do not attach the flanges properly, the paper roll will not fit into the printer.

6900 Printer

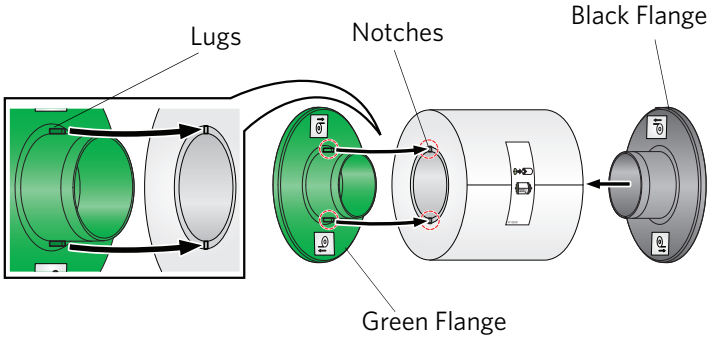

6950 Printer

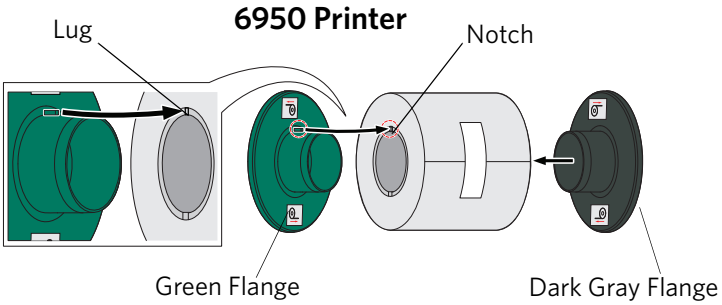

11. Match the colored flanges with the slots of the same color on the printer, then carefully lower the paper roll into the slots.

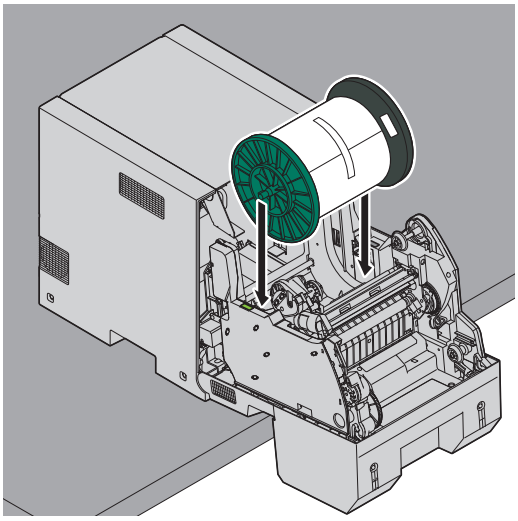

12. Remove the tape from the paper roll.

Note: Verify that the paper unrolls from the top of the roll.

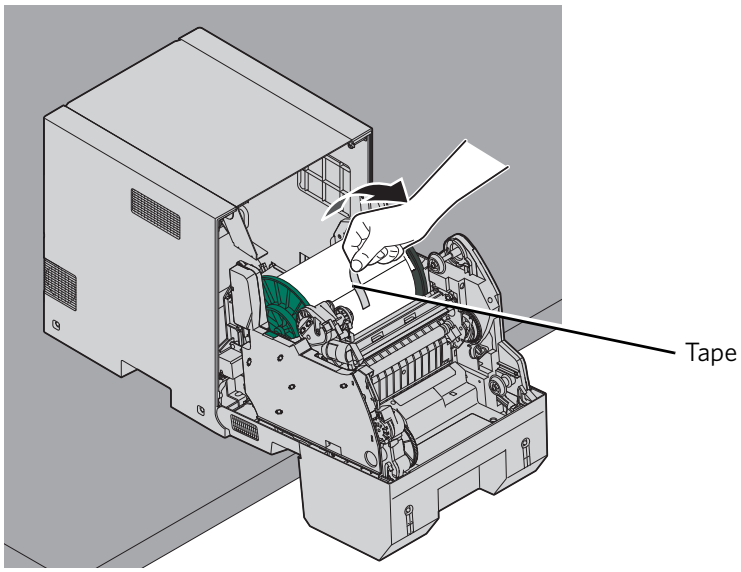

Important: Ribbon must be loaded in the printer (see "Loading the Ribbon" on page 2-18*) before the paper automatically loads and advances.*

13. Insert the edge of the paper between the metal roller and black roller at Paper ▲1.

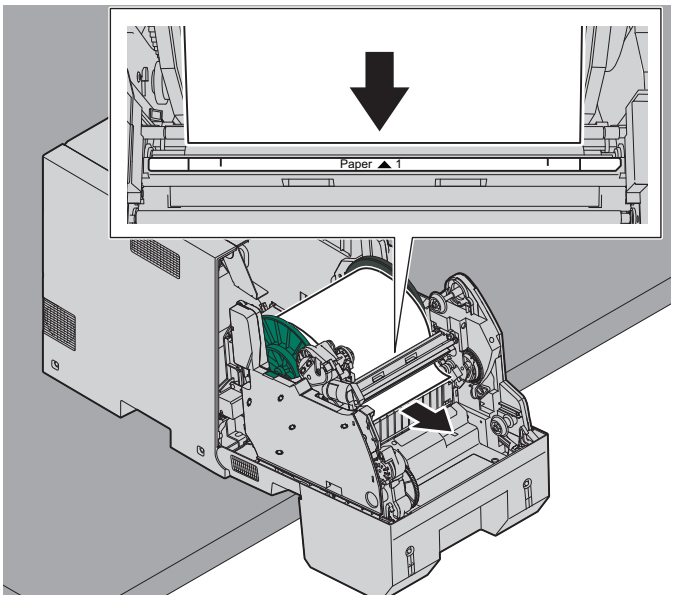

Important: Make sure that the paper is straight. If paper is not aligned properly, rotate the paper roll back and insert the paper again.

14. Feed the paper through the slot at Paper ▲ 2 until the light in the printer turns blue.

Note: If the blue light turns off, remove the paper and reinsert it into the slot at Paper ▲ 2.

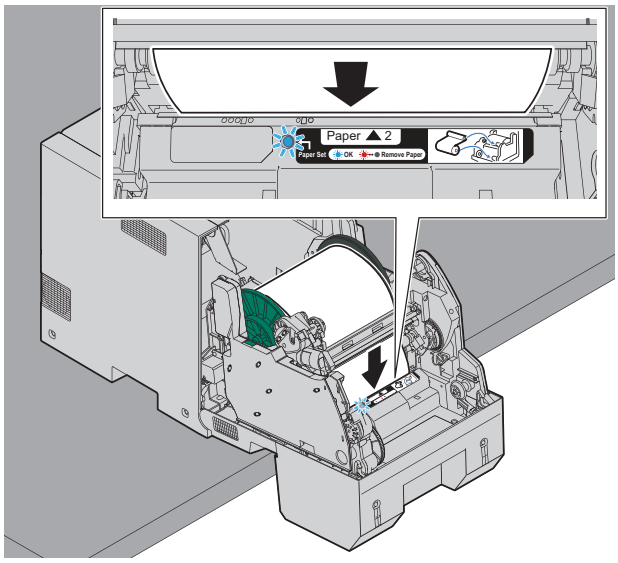

15. Load the ribbon. See "Loading the Ribbon" on page 2-18.
16. Close the front of the printer.

    Once the ribbon is loaded, the light on the front of the printer blinks green and the printer automatically loads the paper. If the light blinks red, there is an error with media loading.

    Six blank sheets of paper are advanced. This portion of the roll may have fingerprints from handling. This does not decrease the print capacity of the roll.

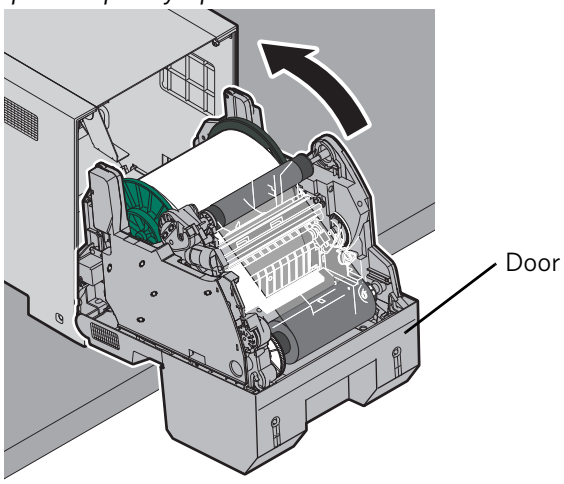

17. Insert the trim tray. See "Installing the Trim Tray" on page 2-7.

Note: If the trim tray is not inserted properly, a paper jam can occur.

18. Wait for the blank sheets to exit the printer.
19. Install the print bin. See "Installing the Optional Print Bin" on page 2-8

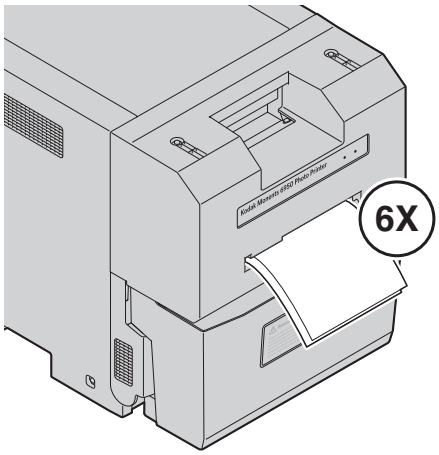

Loading the Ribbon

Make sure that you have the appropriate media kit available (see "Printer Supplies" on page 1-5).

1. Make sure that the power switch is in the On (|) position.
2. Remove the print bin (if installed).

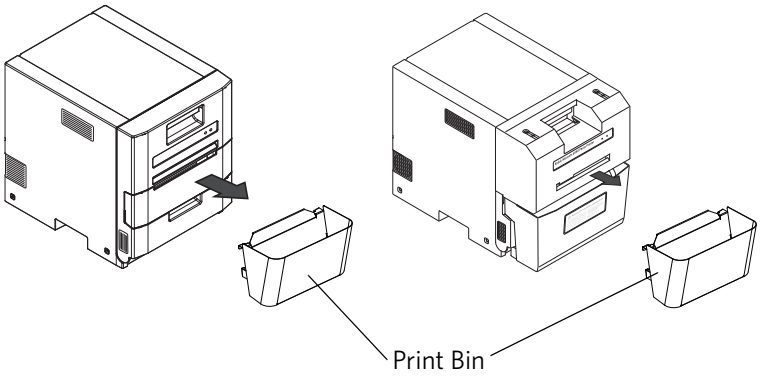

3. Remove and empty the trim tray.

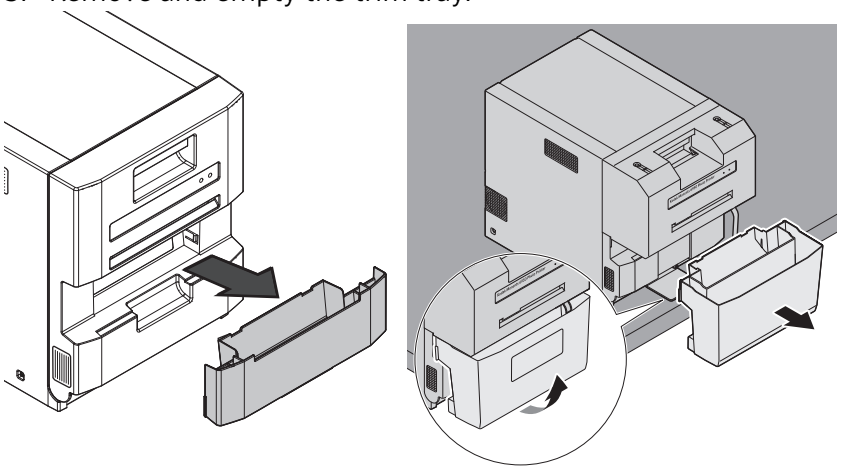

4. Pull the latch on the front door.

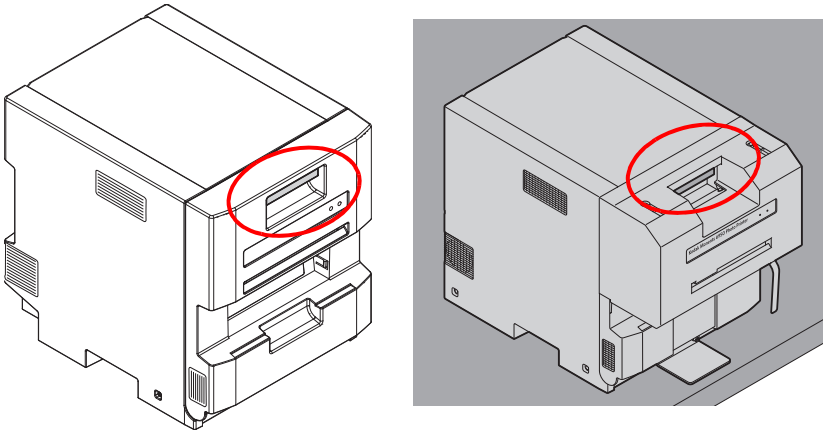

5. Carefully lower the door until it is fully open.

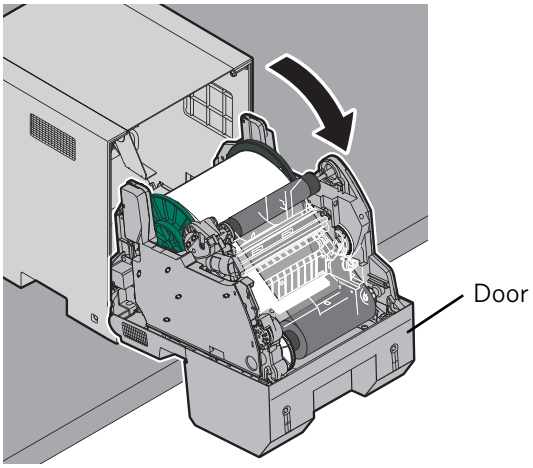

6. Remove the used ribbon.

Note: Images remain on the ribbon after printing. If you need to maintain confidentiality, dispose of the used ribbon appropriately.

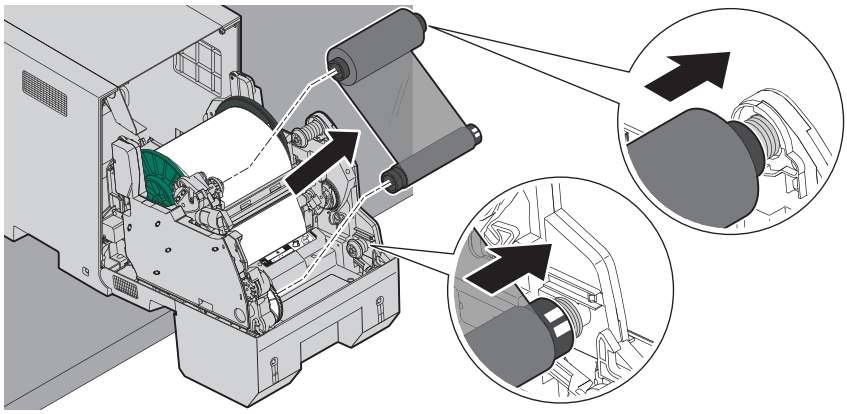

7. Remove the plastic wrapper from the new ribbon. Do not remove the paper band.

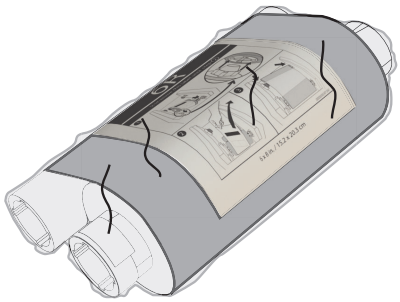

8. Load the new ribbon:
   a. Insert right side of the supply spool into the spool holder on the lower right.
   b. Insert left side of the supply spool into the spool holder on the lower left.
   c. Adjust the supply spool until the spool locks into place.

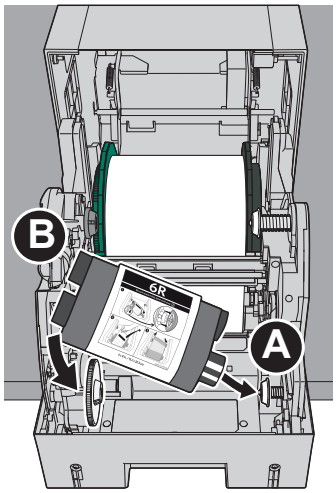

9. Remove the paper band from the ribbon.

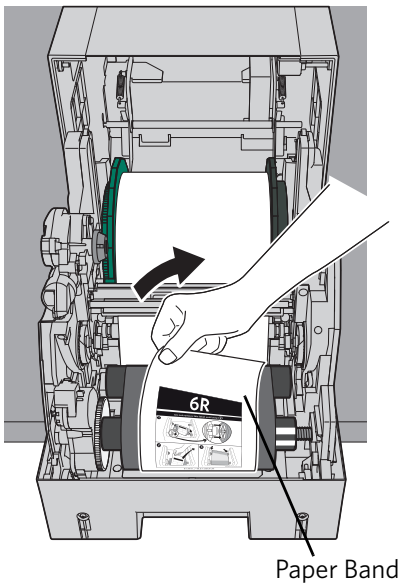

10. Insert the right side of the take-up spool into the spool holder on the right.
11. Insert the left side of the take-up spool into the spool holder on the left.

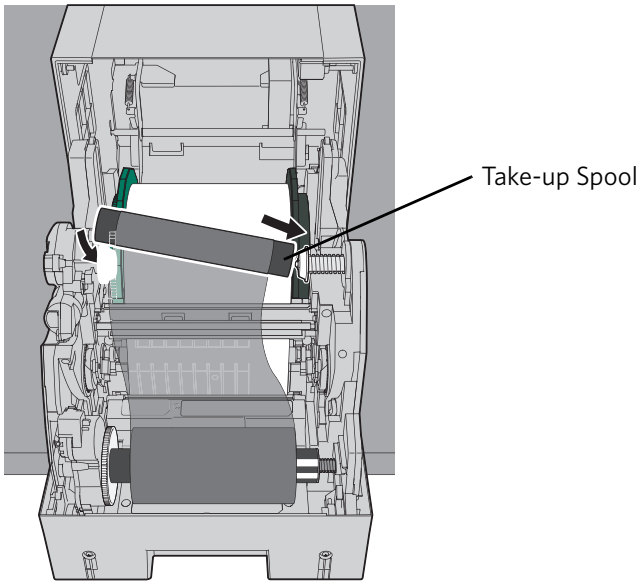

12. Adjust the take-up spool until the spool locks into place.
13. Remove any slack in the ribbon by turning the supply spool.

Important: Slack in the ribbon can cause a paper jam.

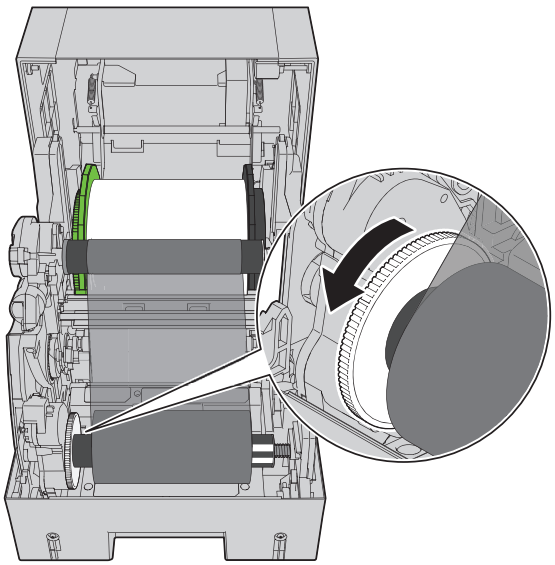

14. Close the front of the printer.

    The light on the front of the printer blinks green. If red light turns on, there is an error with media loading.

    The green light stops blinking and the printer is ready to print.

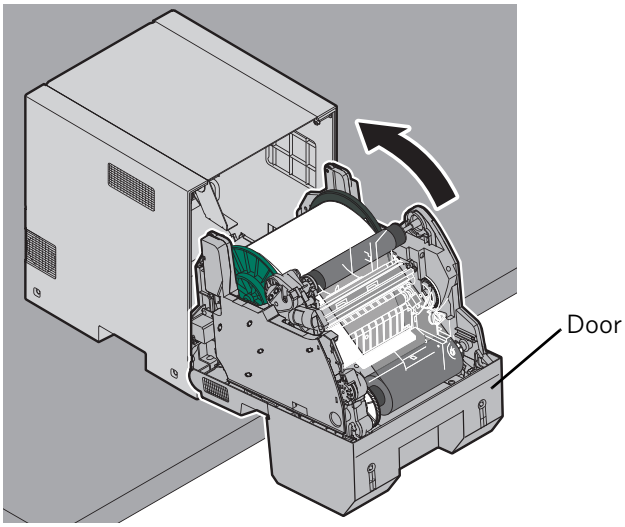

15. Insert the trim try.

Note: If the trim tray is not inserted properly, a paper jam can occur.

16. Wait for the blank sheets to exit the printer.
17. Install the print bin. See "Installing the Optional Print Bin" on page 2-8

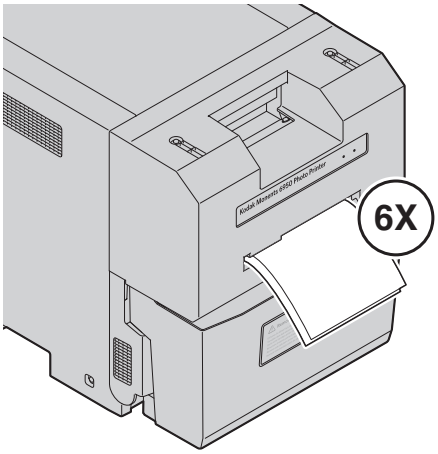

Starting the Software Operator Control Panel

Launch the software operator control panel to view the printer status and change the printer settings. Do not use the Software Operator Control Panel (SOCP) when printing with the driver. Close the SOCP before you print. If the SOCP is left open when printing, the SOCP will close and the printer may reboot. If there are jobs in the print queue, printing will resume after the reboot.

1. Connect the printer to a PC with a USB cable.
2. From the PC, double-click “SOCPstartup.exe”.
3. Wait for “Ready 6x8” or “Ready 5x7” to appear in the software operator control panel.

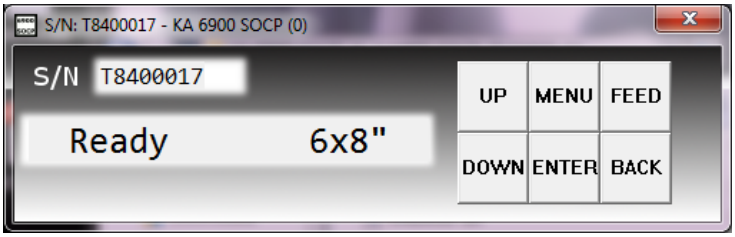

Note: If you have two printers connected to your computer, two separate software operator control panels appear on your screen.

4. For more information on using the software operator control panel in Setup mode, see “Printer Settings” on page 4-3.

Making a Status Print

Print a sheet with the printer serial number, counts, errors, and firmware information.

1. Before you begin, make sure that you connect the printer to a PC with a USB cable.
2. From the PC, double-click “SOCPstartup.exe”.
3. Wait for “Ready” to appear in the software operator control panel.
4. From the software operator control panel, click **MENU** until **STATUS PRINT** appears.

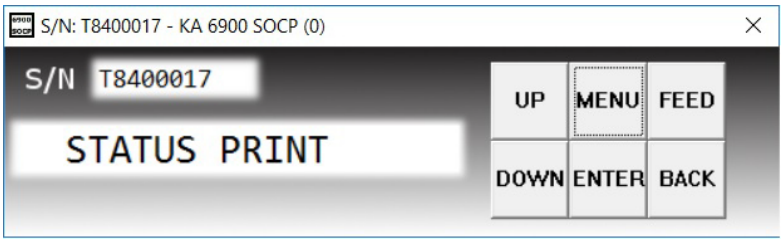

5. Click **ENTER**.

   A status print is printed.

For more information on using the software operator control panel in Setup mode, see “Printer Settings” on page 4-3.

3 Maintaining the Printer

To ensure good printer performance and high-quality prints, make sure the Photo Printer and its environment are clean and dust free.

Performing Routine Maintenance

To maintain good print quality, clean the exterior (see page 3-1) of the printer regularly to eliminate dust buildup and prevent debris from entering the printer.

Make sure you have the KODAK Thermal Printer Cleaning Kit available. This kit contains 10 individually packaged alcohol pads.

CAUTION:
Alcohol is a flammable liquid. It can cause eye irritation and dry skin. Wash your hands with soap and water following any maintenance procedures where you use alcohol pads. For additional information, see the Material Safety Data Sheet (MSDS).

Cleaning the Exterior

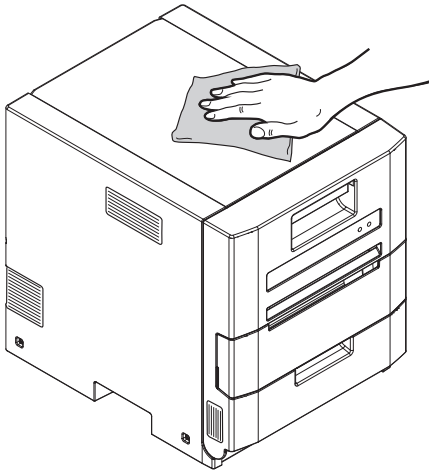

1. Move the power switch to the Off (◯) position.
2. Remove the:
   - print bin - if installed
   - trim tray - See “Removing the Trim Tray” on page 2-8.
3. Empty the trim tray.
4. Wipe the exterior of the printer, print bin, and trim tray with a damp, lint-free cloth.
5. Insert the trim tray and print bin (if present).
6. Move the power switch to the On (|) position.

Cleaning the Thermal Print Head and the Peel Roller

Important: Only do this procedure if directed by a service representative.

1. Move the power switch to the Off (○) position.
2. Remove the print bin (if installed).

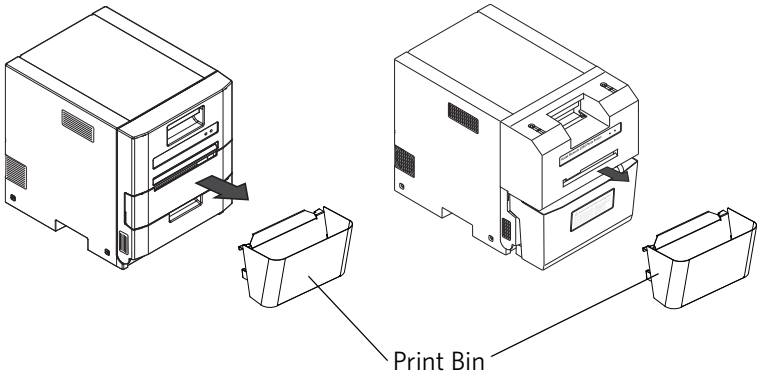

3. Remove and empty the trim tray. See "Removing the Trim Tray" on page 2-8.
4. Pull the latch on the front door.

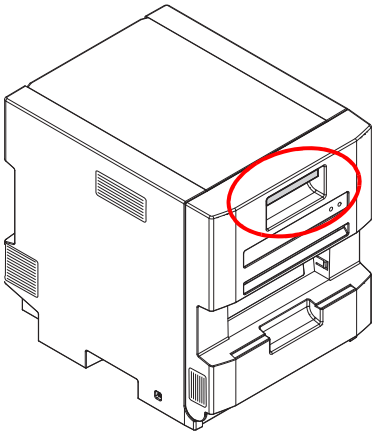

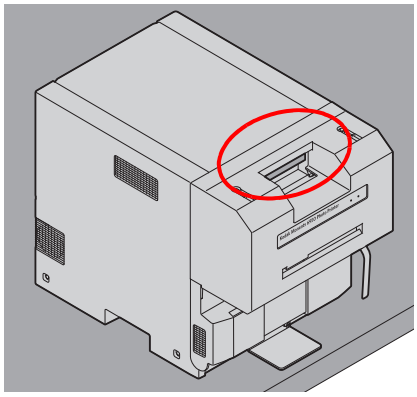

⚠ CAUTION:
The thermal print head becomes extremely hot during normal operation. Wait approximately five minutes after you open the front of the printer before cleaning it. Fingerprints can damage the thermal head. Never touch it with your bare hands or fingers.

5. Carefully lower the door until it is fully open.
6. Remove the ribbon and paper.

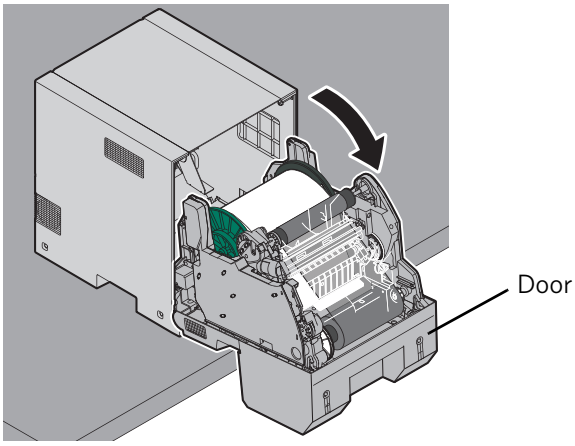

7. Remove a new alcohol pad from its packaging. Move the pad along the entire length of the thermal print head, in one direction only. When you clean the thermal head:
   - Apply firm, even pressure.
   - Make three passes along the thermal print head.
   - Use a clean part of the pad for each pass.

CAUTION: HOT!

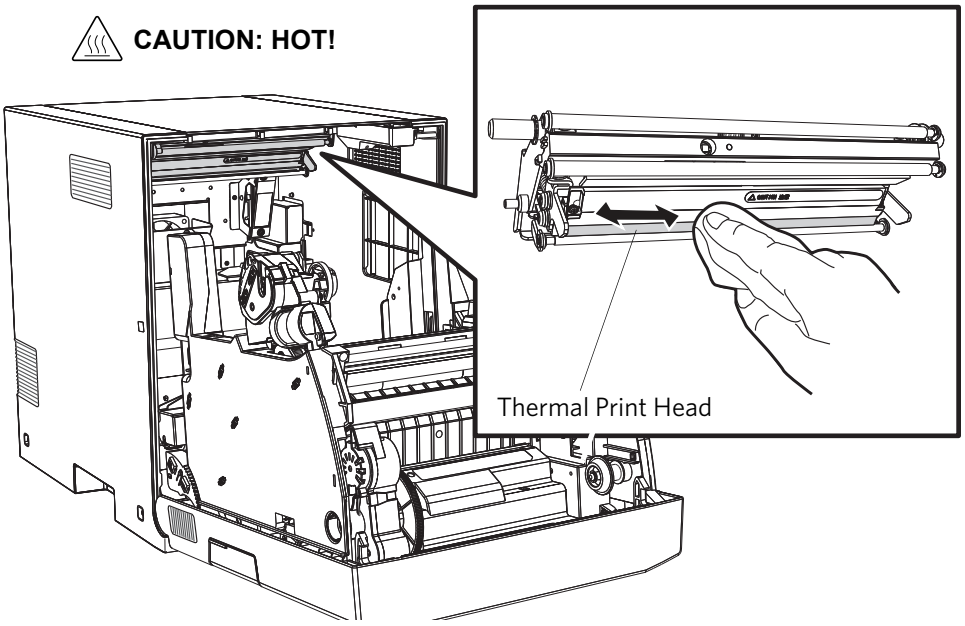

8. Use a new alcohol pad to wipe the peel roller. Rotate the roller to clean the entire roller surface.
9. Allow the alcohol to dry completely (about five minutes) before you resume printing.

10. Move the power switch to the On (|) position.

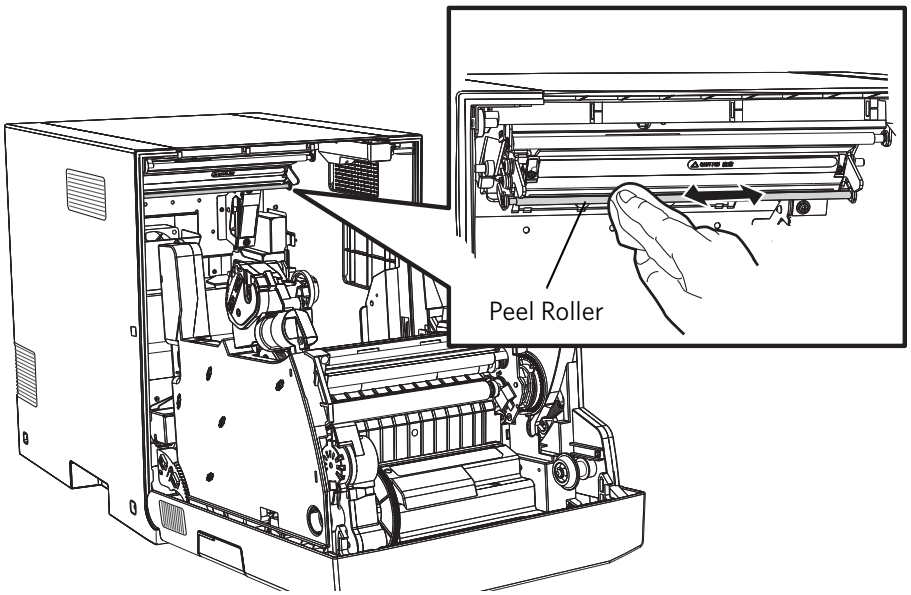

11. Install the paper and ribbon. See pages 2-11 and 2-18.
12. Close the front of the printer.
13. Install the print bin (if present). See page 2-8.

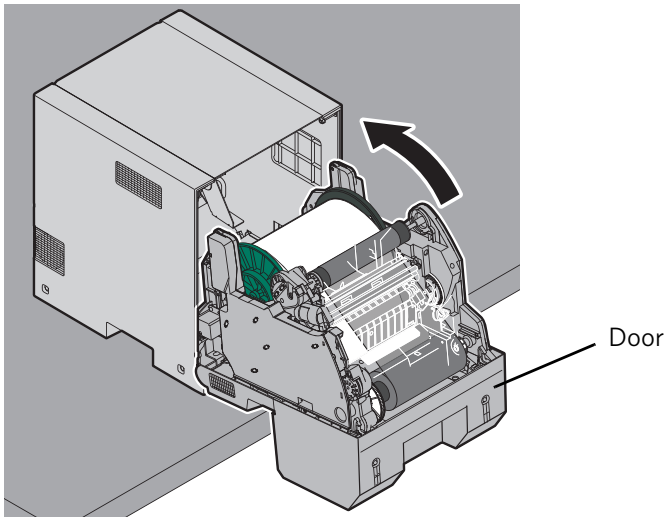

Cleaning the Platen and Pinch Rollers

1. Move the power switch to the Off (○) position.
2. Remove the print bin (if installed).
3. Remove and empty the trim tray. See "Removing the Trim Tray" on page 2-8.

4. Pull the latch on the front door.

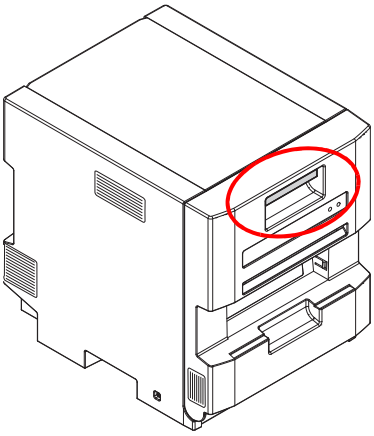

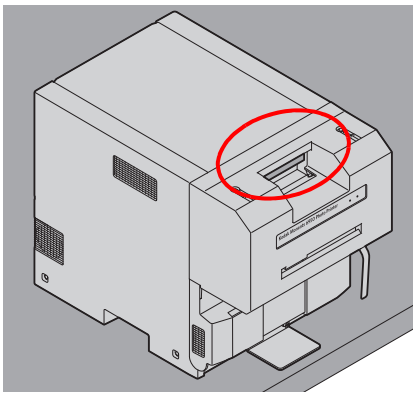

CAUTION:
The thermal print head becomes extremely hot during normal operation. Wait approximately five minutes after you open the front of the printer before cleaning it. Fingerprints can damage the thermal head. Never touch it with your bare hands or fingers.

5. Carefully lower the door until it is fully open.
6. Remove the ribbon and paper.

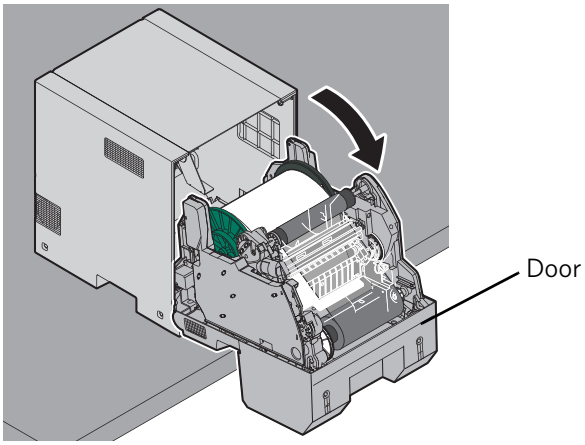

7. Remove an alcohol pad from its packaging. Wipe the rubber section of the platen roller with the pad.
8. Rotate the roller to clean the entire surface.
9. Allow the alcohol to dry completely (about five minutes) before you resume printing.

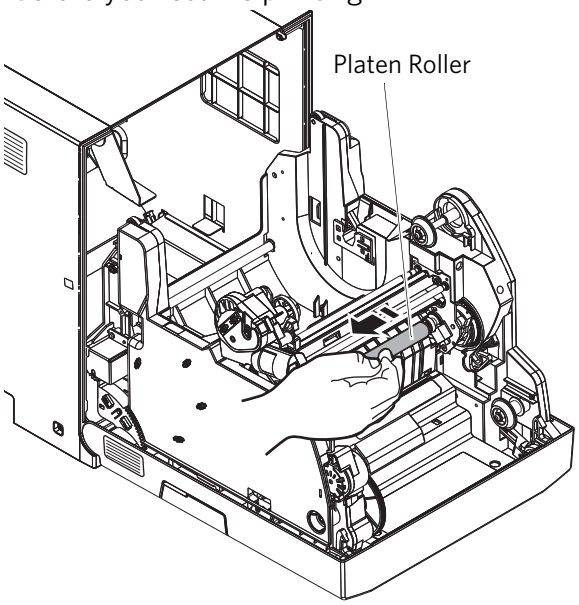

10. Remove a new alcohol pad from its packaging. Wipe the metal pinch roller with the pad.
11. Rotate the roller to clean the entire surface.
12. Allow the alcohol to dry completely (about five minutes) before you resume printing.
13. Move the power switch to the On (|) position.

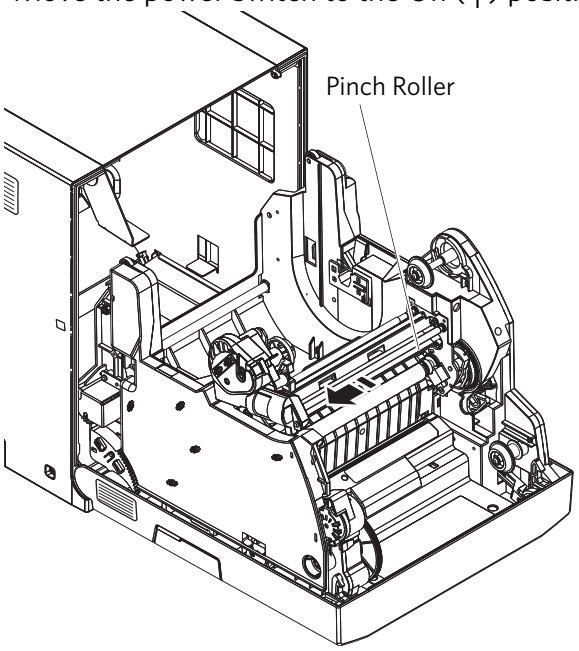

14. Install the paper and ribbon. See pages 2-11 and 2-18.
15. Close the front of the printer.
16. Insert the trim tray. See page 2-7.
17. Install the print bin (if present). See page 2-8.

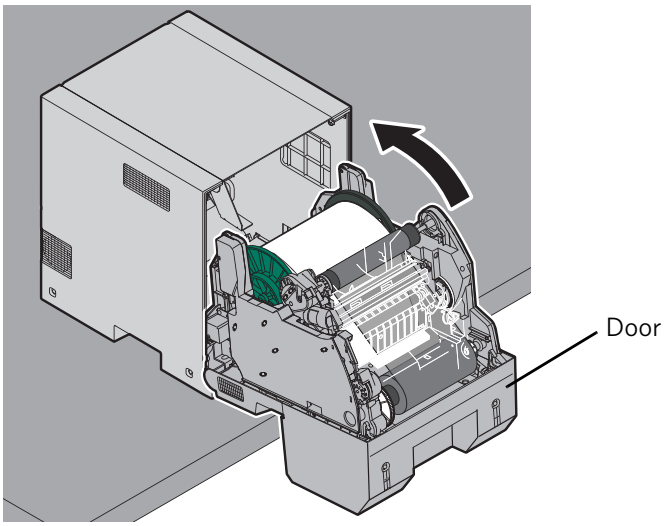

Cleaning the Cleaning Roller

1. Move the power switch to the Off (◯) position.
2. Remove the print bin (if installed).
3. Remove and empty the trim tray. See "Removing the Trim Tray" on page 2-8.

4. Pull the latch on the front door.

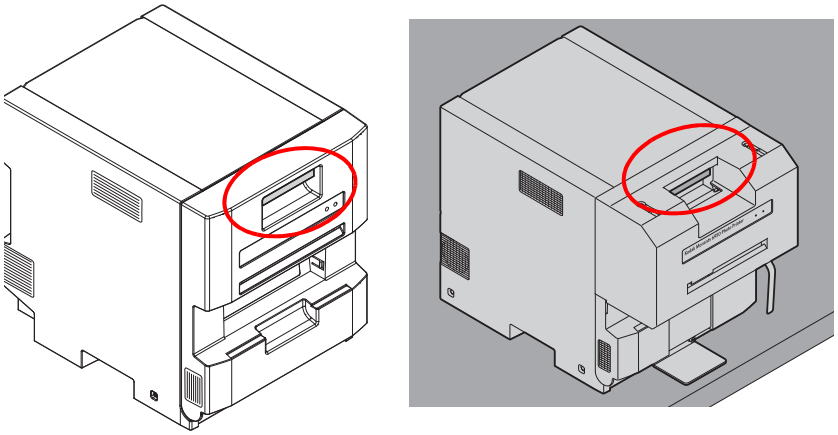

CAUTION:
The thermal print head becomes extremely hot during normal operation. Wait approximately five minutes after you open the front of the printer before cleaning it. Fingerprints can damage the thermal head. Never touch it with your bare hands or fingers.

5. Carefully lower the door until it is fully open.
6. Remove the ribbon and paper.

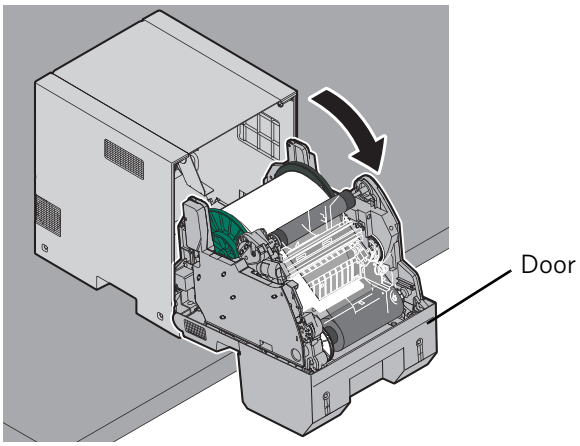

7. Remove a new alcohol pad from its packaging. Wipe the rubber section of the cleaning roller with the pad.
8. Rotate the roller to clean the entire surface.
9. Allow the alcohol to dry completely (about five minutes) before you resume printing.

10. Move the power switch to the On (|) position.

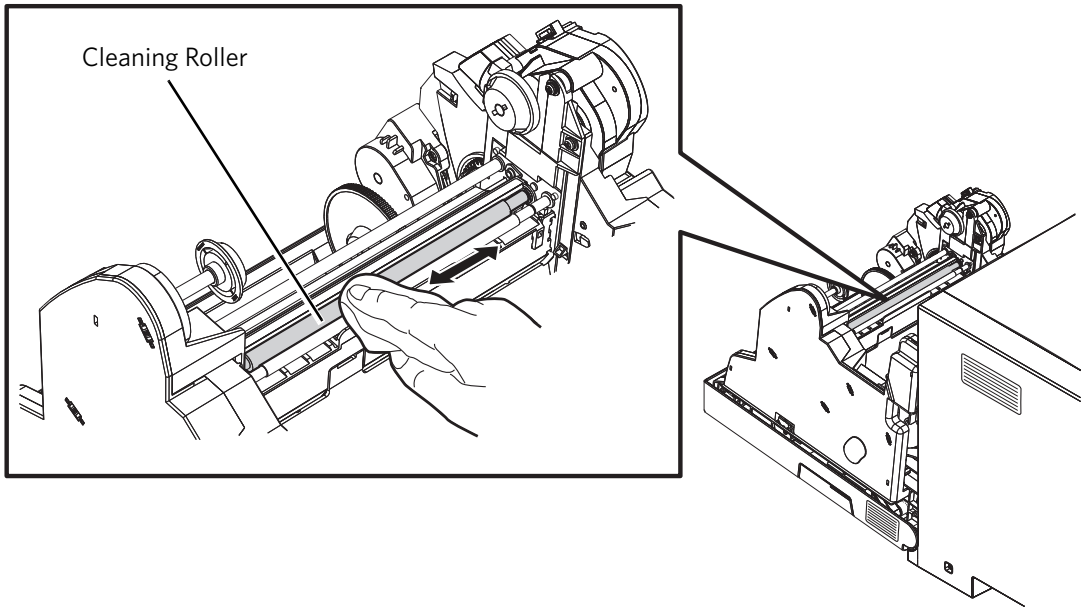

11. Install the paper and ribbon. See pages 2-11 and 2-18.
12. Close the front of the printer.
13. Insert the trim tray. See page 2-7.
14. Install the print bin (if present). See page 2-8.

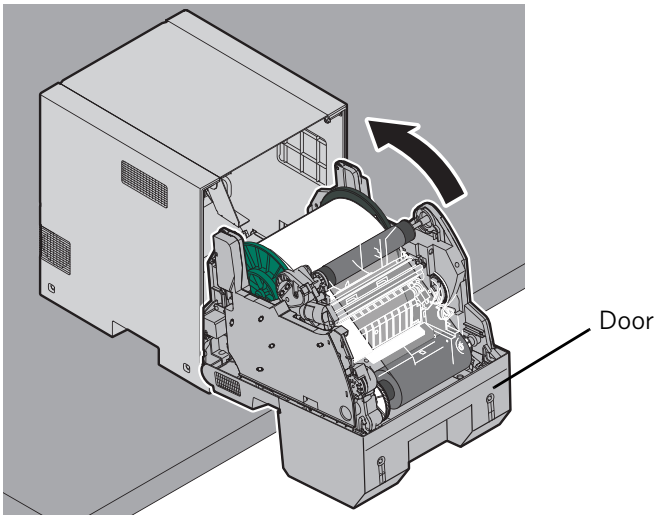

4 Operating the Printer

Making Prints

You make prints using photo printing software applications. For application-specific printing information, see the user's guide or on-line Help for the software application.

Handling and Storing Prints

For best results:

- Make sure hands are clean and free of food, oil, and grease.
- Store prints in a cool, dry environment free of chemical contamination.
- Store prints at temperatures below 25° C (72° F) for extended periods.
- Store prints at a relative humidity between 30-50%.
- Avoid exposure to high-intensity light sources, particularly fluorescent light and sunlight, which are rich in ultraviolet radiation.
- Avoid exposure to vinyl items (those made of polyvinyl chloride, PVC) and any plastic that contains plasticizer. If you use transparent sleeves, make sure they are not PVC-based.

Operator Panel Lights

LED Display			Printer Status
POWER	ERROR	Paper Set	
○	○	○	The printer power is off.
✱	○	N/A	• The printer is initializing after powering on. • The thermal print head is cooling/heating during the printing process. • The printer is receiving data.
●	○	N/A	The printer is ready.
●	✱	○	The paper is empty, or not loaded.
		● Yellow	The ribbon is empty, or not loaded.
		● Purple	The wrong ribbon is loaded.
●	X	X Yellow	The printer could not wind the ribbon.
		X Red	There is a paper jam.
✱	✱	N/A	The front door is open.
Concurrently			
✱	✱	N/A	The front door is not closed properly.
Alternately			
✱	✱	● Blue	Paper is installed.
Concurrently			
●	●	N/A	There is a problem with the controller board.
✱	●	N/A	There is a mechanical problem.

Key
● = ON
○ = OFF
✱ = Slow Blink
X = Fast Blink

Printer Settings

Use the operator panel buttons to review and change printer settings.

1. Click **MENU** to enter User Mode and to scroll through the Main Menu options.
2. Click **UP** or **DOWN** to adjust settings up or down (where applicable). If an adjustment is made, you must click **ENTER** to save that adjustment.
3. Click **ENTER** to initiate an action or accept a change.
4. Click **MENU** to exit User Mode.
5. Click **BACK** to return to the top line of whatever menu you are in.
6. Click **FEED** to advance the paper and cut a 4.2 x 6 in. sheet.
7. If the printer is in a "Ready" state, and you click **BACK**, the paper rewinds into the printer.

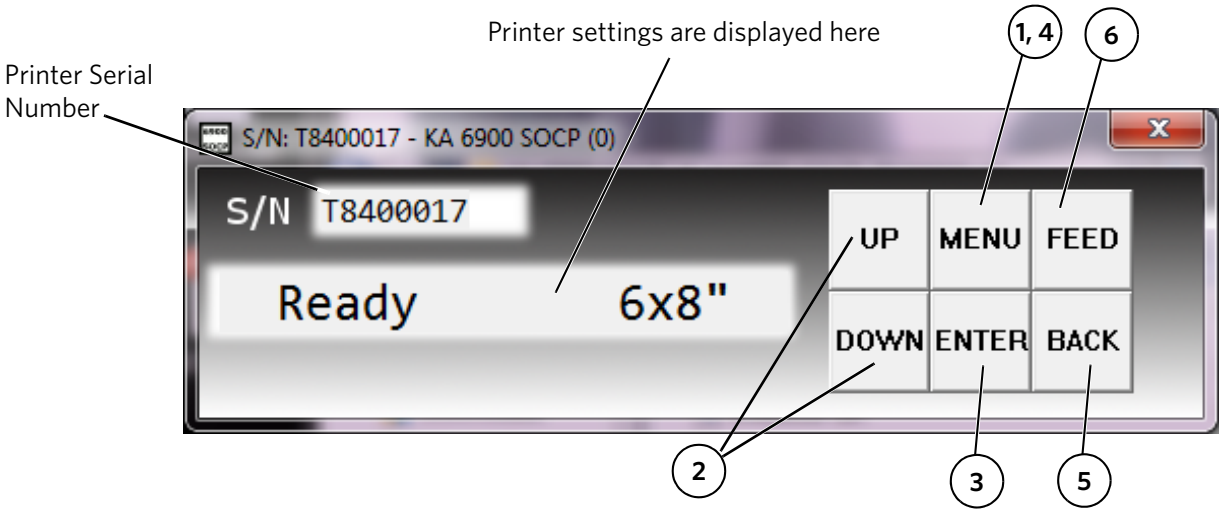

Display - Level 1	Display - Level 2	Description
Ready 6x8 Ready 5x7	----	The printer is on and ready to make prints. 6x8 or 5x7 represents the size of ribbon that is loaded.
REMAIN XXX/XXX	----	Total number of prints printed and remaining number of prints.
PRINTED XXX	----	Total number of prints printed.
MAIN APP	----	Main firmware version number.
TABLE	----	Print parameter table version number.
FPGA	----	FPGA version number.
MAIN BOOT	----	Boot firmware version number.

Display - Level 1	Display - Level 2	Description
STATUS PRINT	----	Prints a sheet with the printer serial number, counts, errors, and firmware information.
Clear Slitter	----	This feature turns on the slitter drive mechanism for a few seconds. Use this if there is a jam in the slitter.
Combo Wait Set	Wait Combo	The amount of time the Printer waits for the next print.

Do not use the Software Operator Control Panel (SOCP) when printing with the driver. Close the SOCP before you print. If the SOCP is left open when printing, the SOCP will close and the printer may reboot. If there are jobs in the print queue, printing will resume after the reboot.

5 Troubleshooting

Problem	Description or Cause	Possible Solution
Sections of the image are not printed.	• Platen roller is dirty. • Pinch roller is dirty.	1. Clean the platen roller (see page 3-4). 2. Clean the pinch roller (see page 3-4).
Paper surface is scratched.	Debris in the paper path.	1. Clear any debris from the paper path. 2. If the problem persists, contact Service and Support.
Prints have horizontal streaks.	• Peel roller is dirty. • Platen roller is dirty. • Pinch roller is dirty.	1. Clean the peel rollers (see page 3-2). 2. Clean the platen roller (see page 3-4). 3. Clean the pinch roller (see page 3-4).
Prints have vertical streaks. 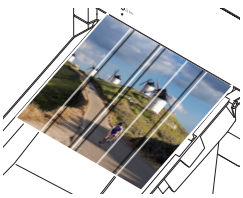	Thermal print head is dirty.	If directed by Service and Support, clean the Thermal Print Head. See page 3-2.
Prints have streaks made up of small dots.	Platen roller is dirty.	Clean the platen roller (see page 3-4).
Paper is skewed.	• Paper is not loaded correctly, or it is loose on the roll. • Debris in the paper path. • Pinch roller is dirty.	1. Make sure that the paper is loaded correctly and wound tightly onto the roll (see page 2-11). 2. Clear any debris from the paper path. 3. Clean the pinch roller (see page 3-4).
Paper edge is bent.	Debris in the paper path.	Clear any debris from the paper path.
An abnormal noise occurs during paper feeding.		
Computer does not recognize the printer.	USB cable is not connected correctly, or it is damaged.	Check that the USB cable is connected correctly and not damaged.

Problem	Description or Cause	Possible Solution
Print borders are not even.	• Paper is not loaded correctly, or it is loose on the roll. • Debris in the paper path. • The printer needs to be calibrated.	• Make sure that the paper is loading correctly and wound tightly onto the roll, see page 2-11. • Clear any debris from the paper path. • Download the calibration application from www.kodakalaris.com/go/printerupdates.

Resolving Operator Panel Status/Error Messages

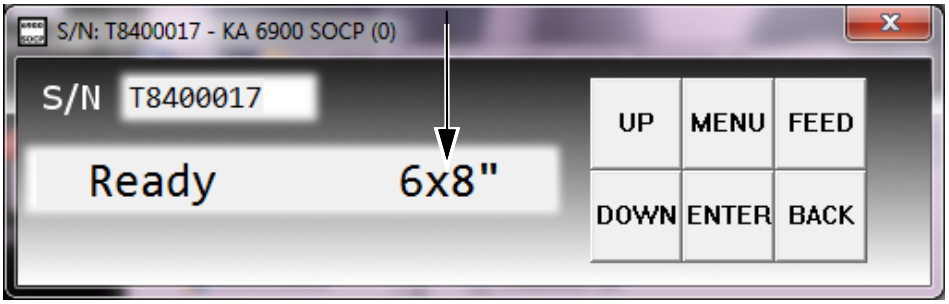

Refer to the following table to resolve errors that appear on the operator panel. If the error persists, contact Service and Support.

Message	Description or Cause	Possible Solution
Cover Open Close Cover	The front door is open.	Close the front cover.
Incorrect Rib	The wrong type of ribbon is loaded.	Check for 6FR2 and 5FR2 on the ribbon supply spool. If necessary, replace the ribbon with the correct type (see page 2-18).
No Paper	• The paper is empty or is not loaded correctly. • The paper and ribbon are both empty.	Load (or reload) the paper (see page 2-11), and load ribbon if necessary (page 2-18).
No Ribbon	The ribbon is empty or is not loaded correctly.	Load the correct ribbon (see page 2-18).
Paper Jam	The paper is jammed in the paper path.	Clear the paper jam from the paper path, then reload the paper. If the error persists, turn the printer off and then on again.

Message	Description or Cause	Possible Solution
Paper Jam (6950 Printer Only - Jam during slitting)	• The trim tray is full or not inserted properly. • The diverter is not inside of the front compartment of the trim tray. • There is debris in the slitter paper path.	• Empty the trim tray and make sure that it is inserted properly. • Check that the diverter is inside of the front compartment of the trim tray. • Use the clear slitter function on the SOCP.
PaperOverInsert	The paper was installed too far forward.	Remove the paper and insert it into the slot at Paper ▲ 2.
RibbonErrRewind	• The printer was unable to wind the ribbon. • The ribbon tore. • A paper jam occurred which prevented the ribbon from winding.	• Make sure the ribbon is installed correctly (see page 2-18). • Repair and reload the ribbon (see page 5-11) • Clear the paper jam (see page 5-4).
RibbonErrorSensing	The printer could not detect the ribbon.	Make sure the ribbon is installed correctly (see page 2-18).

Clearing a Paper Jam

If a **Paper Jam** message appears on the software operator control panel, follow this procedure. If a paper jam occurs in the slitter, or **Paper Jam 70 -79** appears on the software operator control panel, see "Clearing a Slitter Jam from the 6950 Printer" on page 5-8.

1. Move the power switch to the Off (○) position.
2. Remove the print bin (if installed).

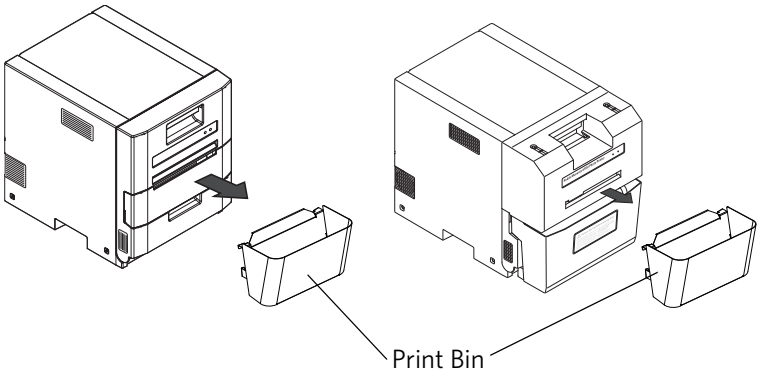

3. Remove and empty the trim tray. See "Removing the Trim Tray" on page 2-8.
4. Clear any debris from the exit.

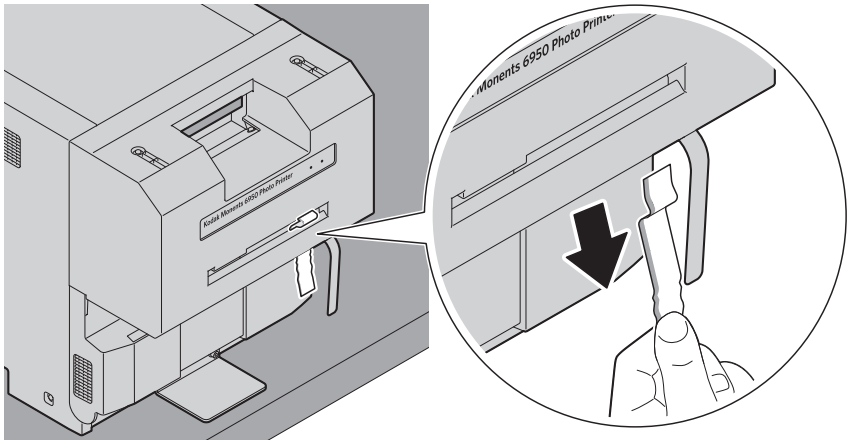

5. Pull the latch on the front door.

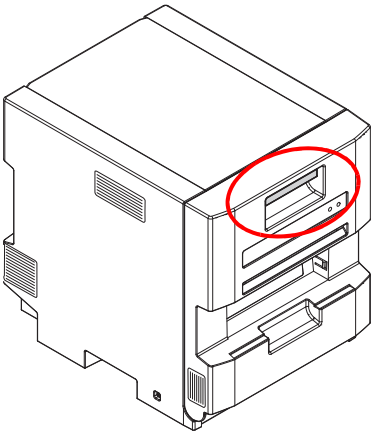

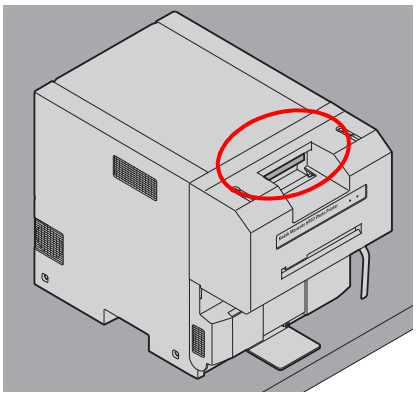

6. Carefully lower the door until it is fully open.

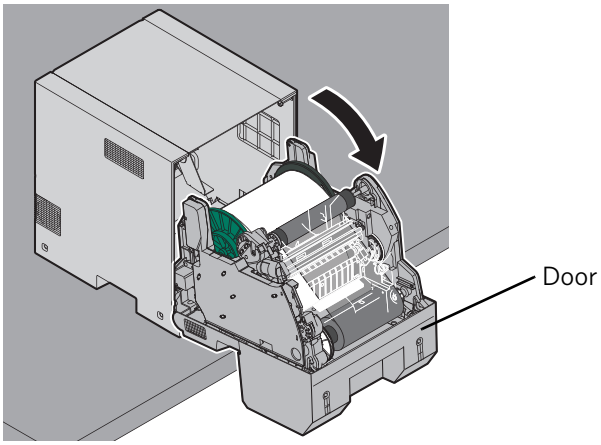

7. Remove the used ribbon.

Note: Images remain on the ribbon after printing. If you need to maintain confidentiality, dispose of the used ribbon appropriately.

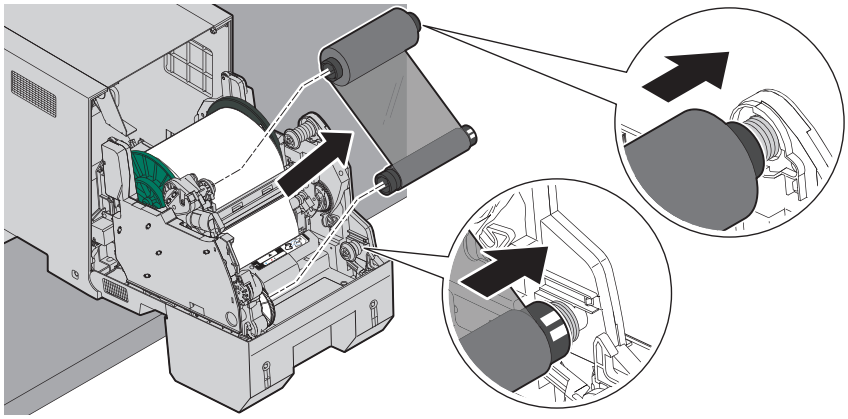

CAUTION:
To prevent damage to the printer, do not pull abruptly on the paper.

8. Use both hands to manually rewind the paper onto the roll.

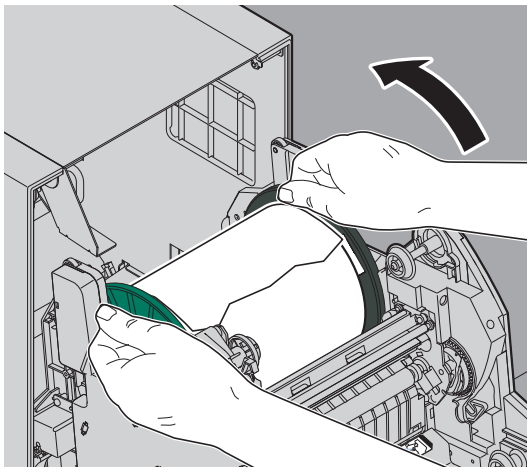

CAUTION:
Be careful not to damage or mark any rollers.

9. Cut off damaged or printed areas of the paper.
10. Look inside the printer and carefully remove any pieces of paper.
11. Move the power switch to the On (|) position.
12. Install the paper and ribbon. See pages 2-11 and 2-18.

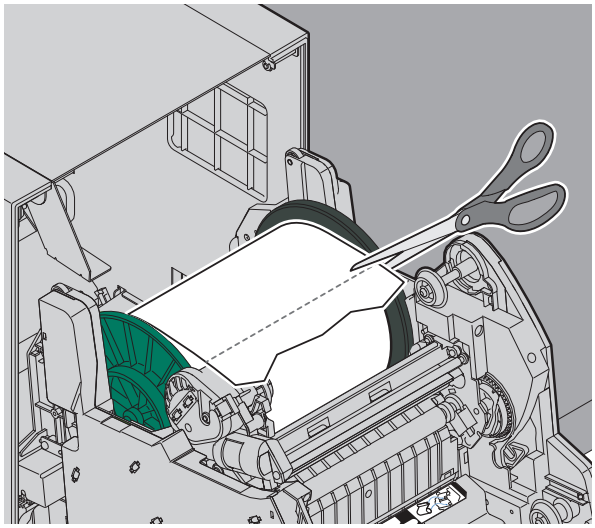

13. Close the front of the printer.
14. Install the trim tray. See page 2-7.
15. Install the print bin (if present). See page 2-8.

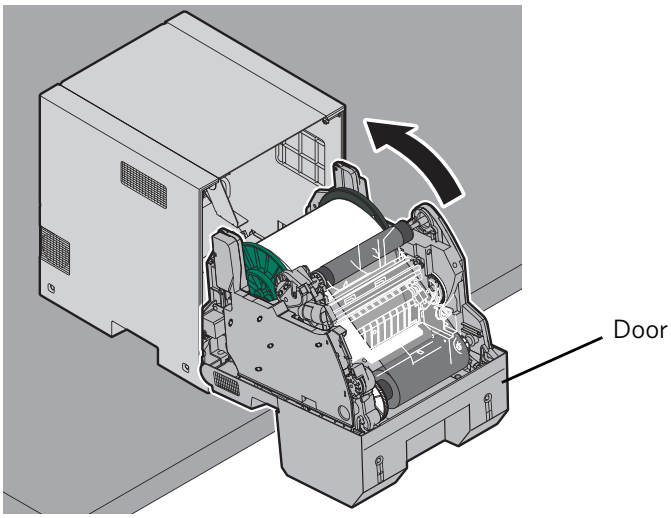

Clearing a Slitter Jam from the 6950 Printer

If a paper jam occurs in the slitter, or **Paper Jam 70 - 79** appears on the software operator control panel, follow this procedure.

1. Remove the print bin (if installed).

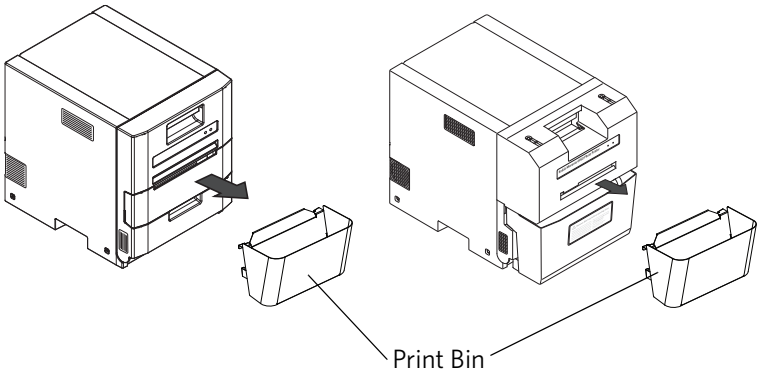

2. Remove and empty the trim tray. See “Removing the Trim Tray” on page 2-8.
3. Move the power switch to the Off (○) position.
4. Clear any debris from the exit.

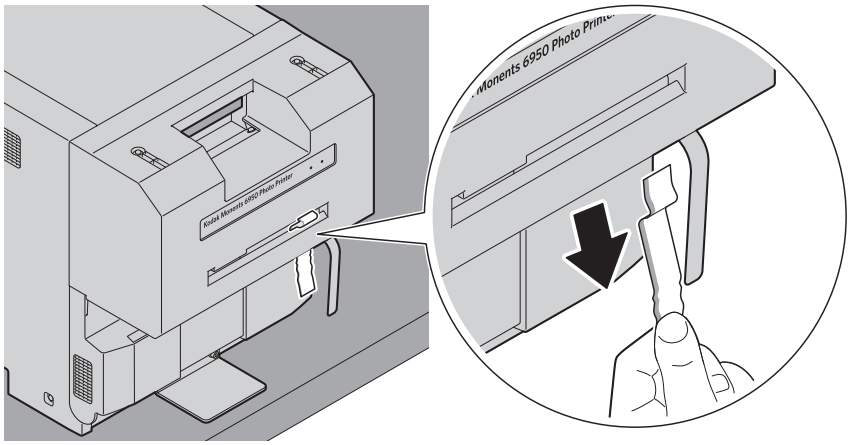

5. Pull the latch on the front door.

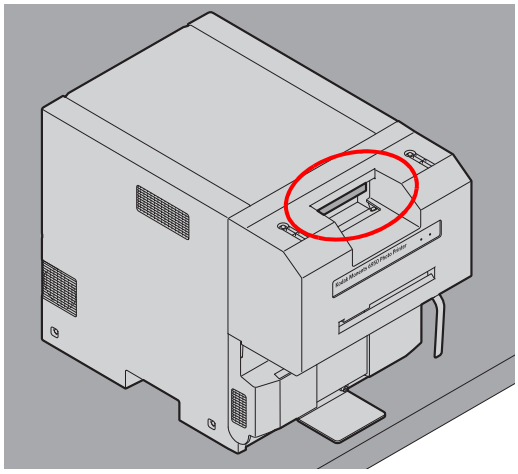

6. Carefully lower the door until it is fully open.

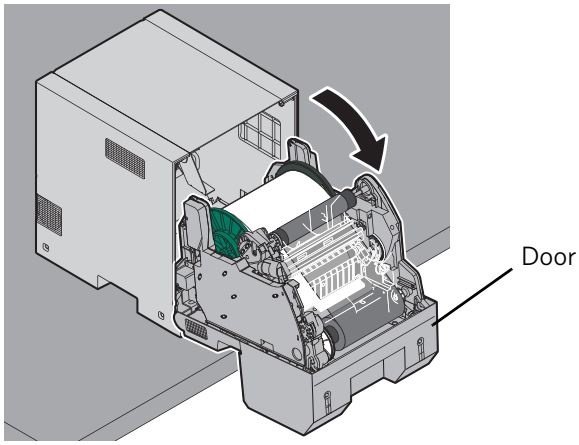

7. Remove the used ribbon.

Note: Images remain on the ribbon after printing. If you need to maintain confidentiality, dispose of the used ribbon appropriately.

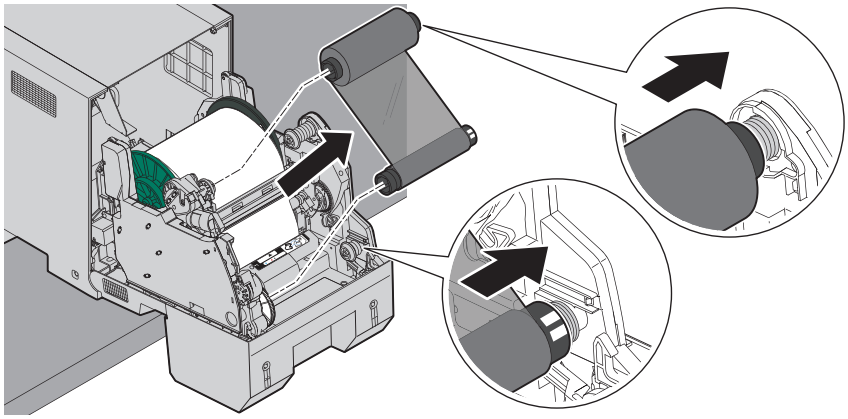

CAUTION:
To prevent damage to the printer, do not pull abruptly on the paper.

8. Use both hands to manually rewind the paper onto the roll.

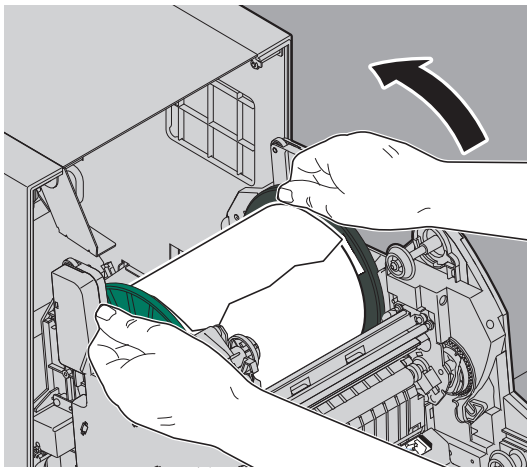

CAUTION:
Be careful not to damage or mark any rollers.

9. Cut off damaged or printed areas of the paper.

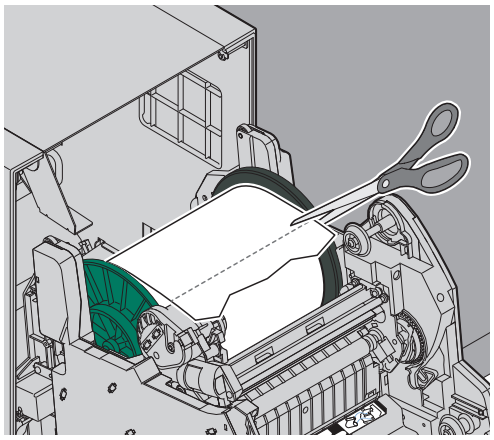

10. Look inside the printer and carefully remove any pieces of paper.
11. Close the front of the printer.
12. Move the power switch to the On (|) position.
13. Open the Software Operator Control Panel (SOCP).
14. Click **MENU** until “Clear Slitter” appears.
15. Click **ENTER**.
16. Click **ENTER** to confirm “Clear Slitter?”.
17. Close the SOCP once “Complete” appears.

18. Open the front of the printer.
19. Install the paper and ribbon. See pages 2-11 and 2-18.
20. Close the front of the printer.

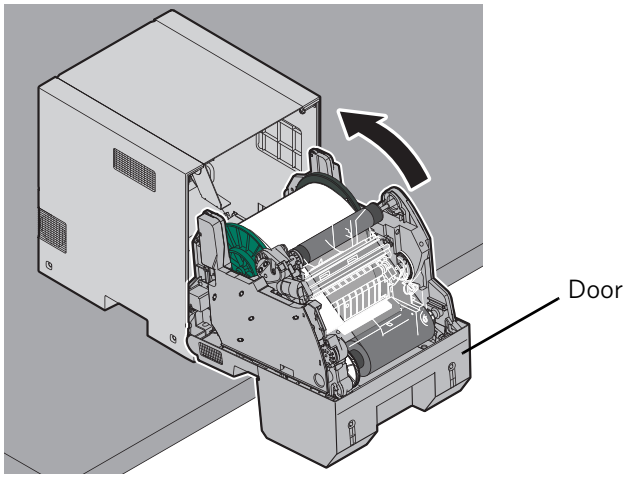

21. Install the trim tray. See page 2-7.
22. Install the print bin (if present). See page 2-8.

Repairing a Damaged Ribbon

1. Move the power switch to the Off (◯) position.
2. Remove the print bin (if installed).

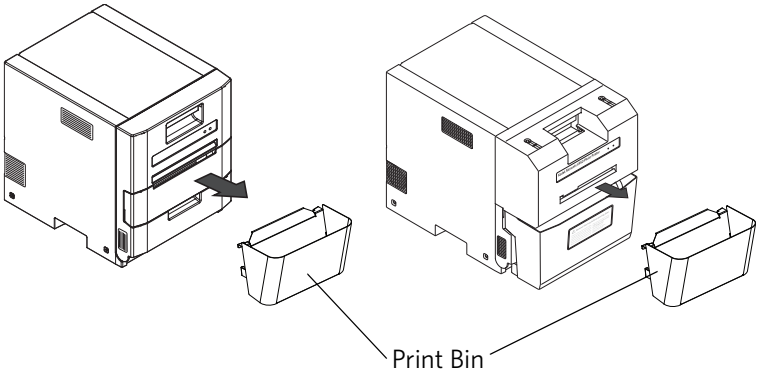

3. Remove and empty the trim tray. See "Removing the Trim Tray" on page 2-8.

4. Pull the latch on the front door.

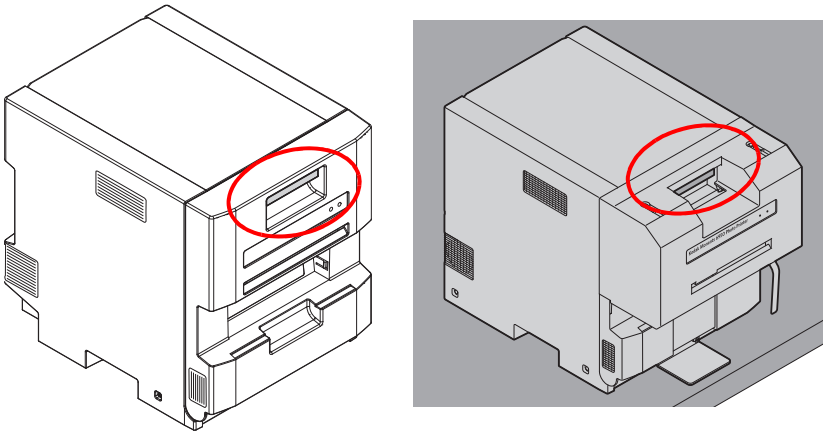

5. Carefully lower the door until it is fully open.

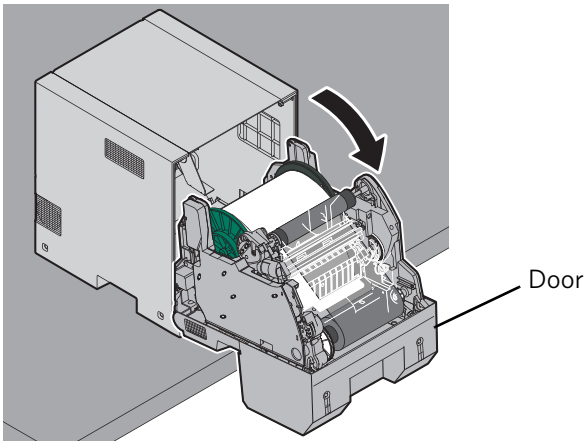

6. Remove the used ribbon.

Note: Images remain on the ribbon after printing. If you need to maintain confidentiality, dispose of the used ribbon appropriately.

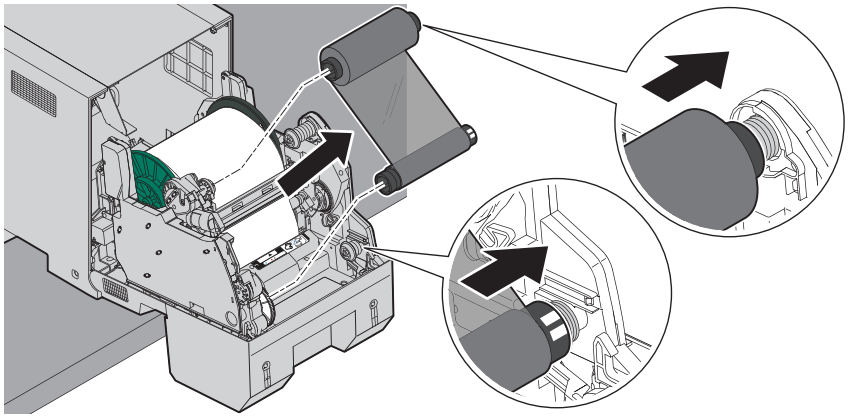

7. Cut off any damaged areas of the ribbon.

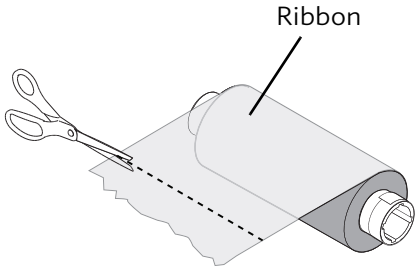

8. Overlap the ends of the ribbon.
9. Place tape at the center and at each end of the ribbon.

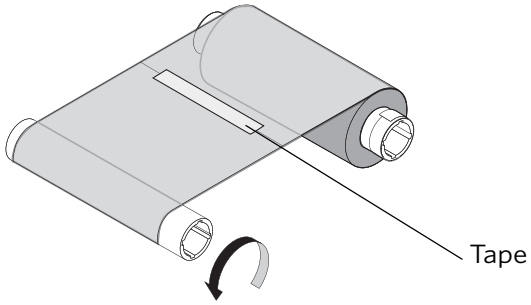

Important: Slack in the ribbon can cause a paper jam.

10. Wind the repaired end of the ribbon onto the take-up spool. Make sure that you remove any slack in the ribbon.
11. Move the power switch to the On (|) position.
12. Install the ribbon. See “Loading the Ribbon” on page 2-18.

13. Close the front of the printer.

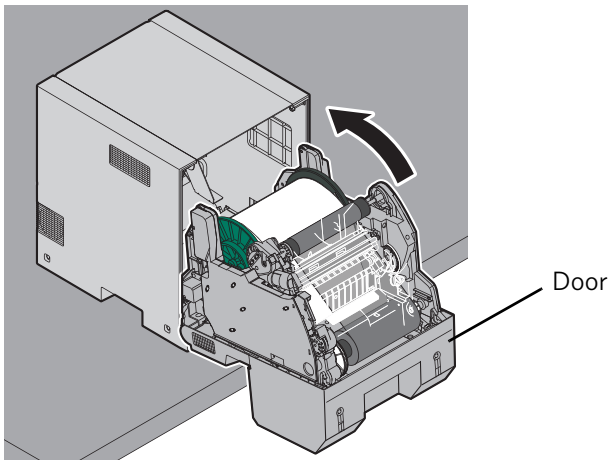

14. Install the trim tray. See page 2-7.
15. Install the print bin (if present). See page 2-8.

Recovering from a Power Interruption

CAUTION:
If the printer loses power while printing, the printer stops with the thermal print head is positioned against the platen roller. The platen roller could become damaged if the thermal print head is left in this position.

If a power outage occurs:

1. Remove the print bin (if installed).

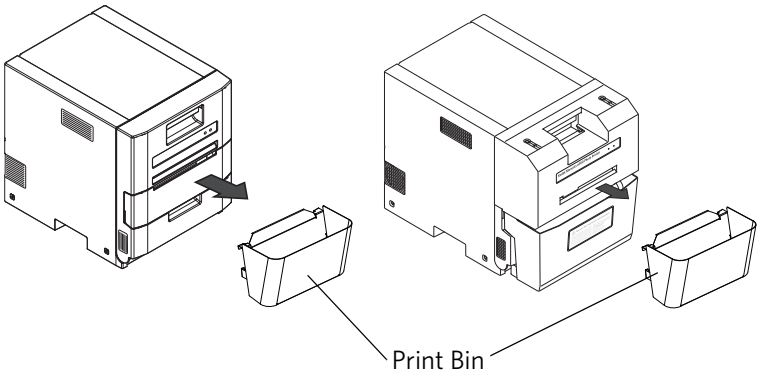

2. Were you printing when the power outage occurred?

Yes	No
a. Power cycle the printer. b. Follow the procedure for "Clearing a Paper Jam" on page 5-4. c. Send the print job again.	Power on the printer when the power is restored.

Appendix A: KODAK MOMENTS 6950 Photo Printer Trim Tray Utility

Using the Trim Tray Utility

The KODAK MOMENTS 6950 Photo Printer Driver offers the ability to use 6-inch media to print 5-inch prints in the following sizes:

- 3.5 x 5 in. (8.9 x 12.7 cm)
- 5 x 5 in. (12.7 x 12.7 cm)
- 5 x 7 in. (12.7 x 17.78 cm)

The 6950 Photo Printer has slitter knives that trim the paper to achieve the desired print size. As a result, trim waste is generated and collected in the trim tray waste bucket located in the front of the printer. If not periodically emptied, the trim tray can overflow with waste, causing printing issues such as cutter and paper jams.

The 6950 Photo Printer suspends printing and displays a warning that the trim tray is full after printing approximately half of the roll of media. By default, this feature is turned off. The 6950 Trim Tray Utility allows you to turn the feature on or off, as well as clear the "Trim Tray Full" error message.

1. Launch the Trim Tray Utility.

Note: The first time that the utility is launched, the **Disable** button is blue, indicating that the error messaging feature is disabled. Once the error messaging feature is enabled, it will remain enabled until you turn the feature off.

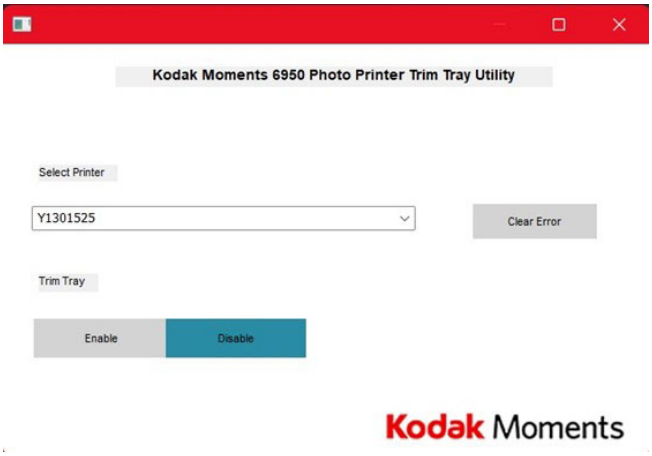

2. Click **Enable** to enable the error messaging feature.
3. Click **OK** at the message prompt.

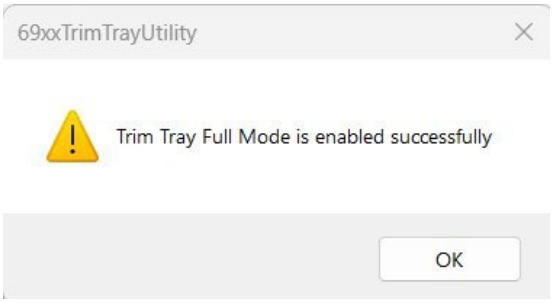

The **Enable** button is blue, indicating that the error messaging feature is enabled.

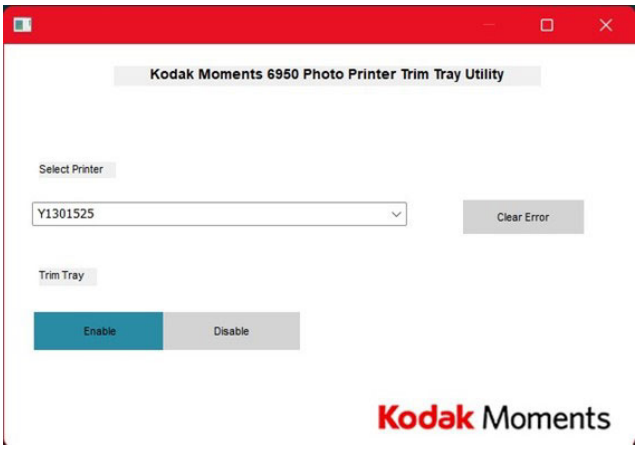

4. If the error messaging feature is enabled, and the trim tray waste threshold is reached, the following error appears in the WINDOWS print queue when using the 6950 Print Driver.

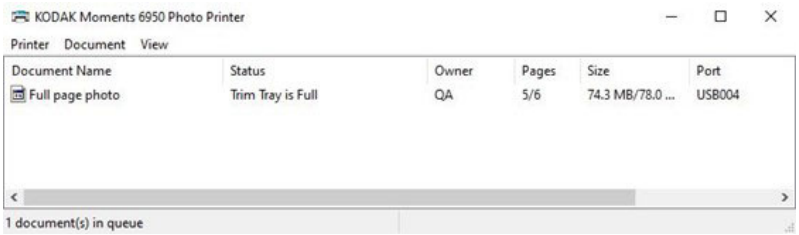

5. Once the trim tray full error message is displayed in the print queue, the **Clear Error** button on the trim tray utility is selectable. Empty the trim tray on the front of the printer. Click **Clear Error** in the Trim Tray Utility.

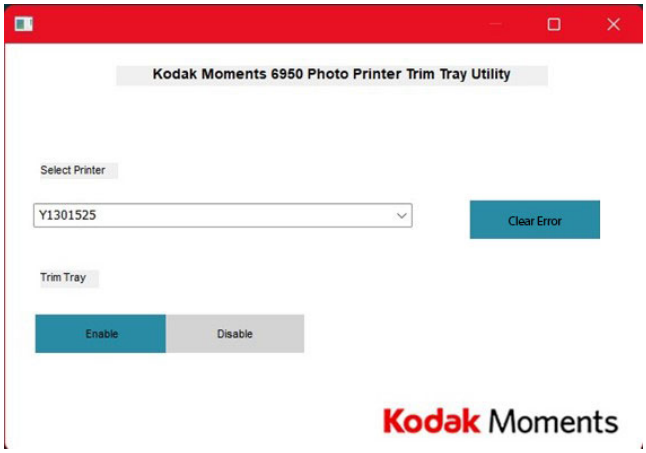

6. Click **OK** at the message prompt. Once the error is cleared, the printer resumes printing.

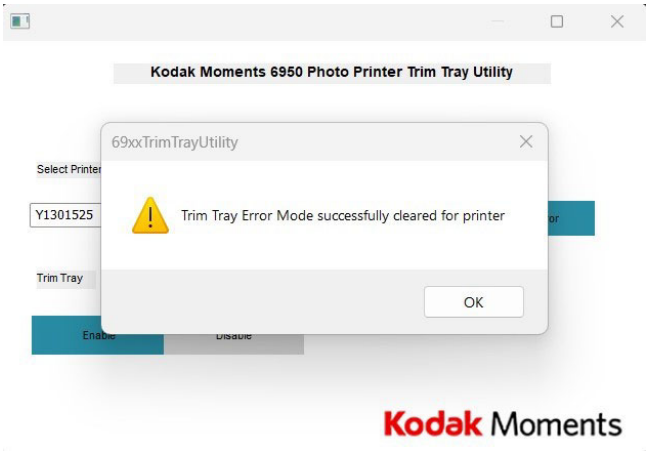

Appendix B: Safety and Regulatory Information

Important Safety Information

CAUTION:
Use of controls or adjustments or performance of procedures other than those specified in this manual may result in injury and/or damage to the printer.

- The power outlet should be easily accessible and installed near the printer.
- Position the power cord so that it cannot be pulled on or tripped over.
- Never allow the power cord to contact hot surfaces.
- The power outlet must be grounded. An ungrounded outlet can cause fire, electric shock, or harmful interference to nearby electrical devices.
- Use only the power cord provided with the printer.
- Do not operate the printer with a damaged power cord.
- Always unplug the power cord from the printer before cleaning or when the printer is not in use.
- If the printer has been dropped or damaged, make sure a qualified service person examines the printer before you use it.
- Do not block the filter openings on the printer cabinet.
- Do not expose the printer to moisture or water.
- Do not allow any foreign objects or liquids to fall or spill inside the printer. Fire or electric shock could result.
- The thermal print head becomes extremely hot during normal operation. Do not touch it.
- Alcohol pads are used to clean the thermal print head and other internal printer components. Consult the manufacturer's Safety Data Sheet prior to use. In case of emergency, use the contact telephone number listed in Section 1 of the Safety Data Sheet.

Safety Labels

Please observe the important safety warnings that are posted on the printer.

CAUTION:
HOT SURFACE—To prevent burns, use caution in these areas.

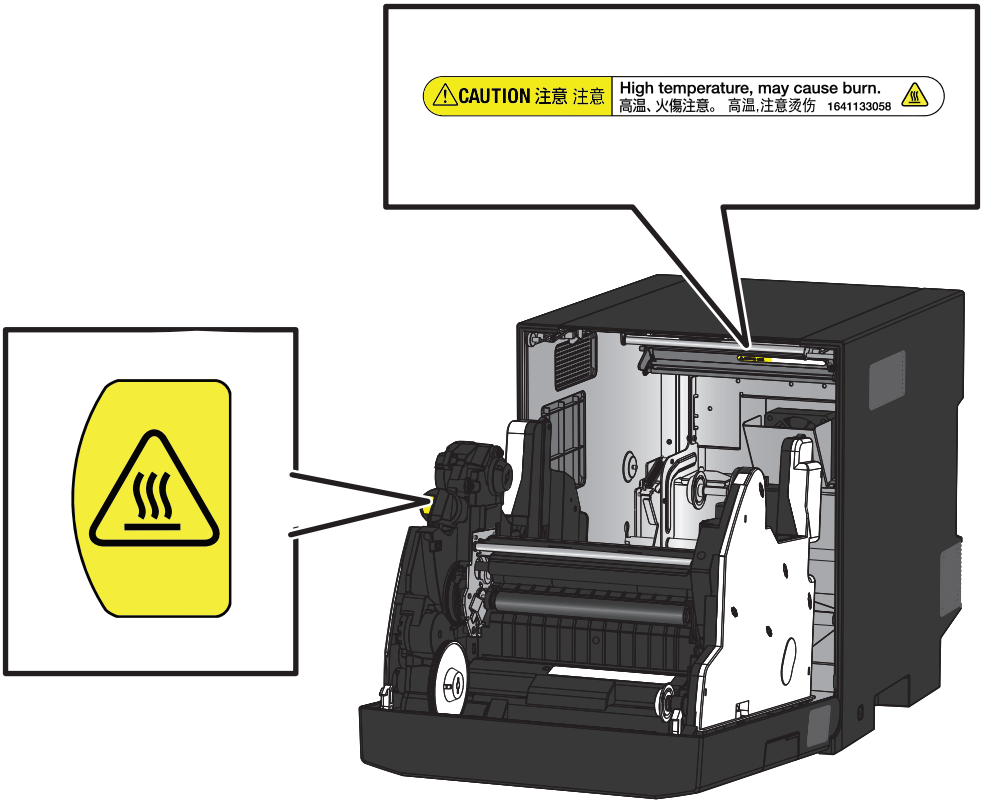

CAUTION:
SHARP CUTTER BLADE / PINCH—Do not insert hands or objects. There are sharp cutter blades inside the printer. There are moving parts inside and outside the printer.

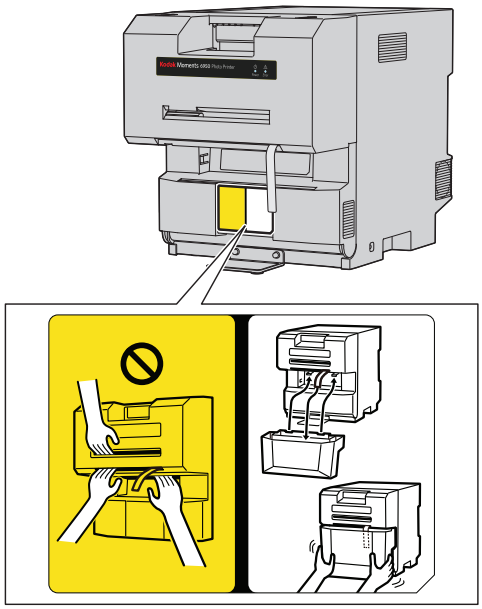

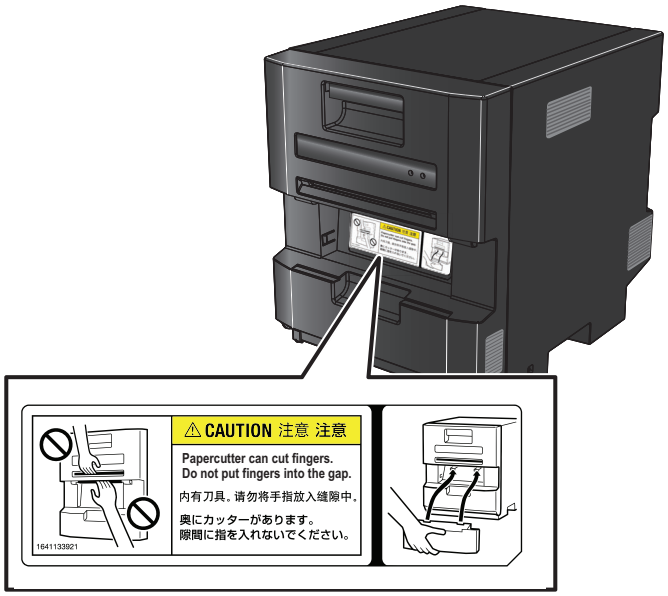

CAUTION:
TIPPING RISK—To prevent the 6950 Printer from tipping, make sure the front bracket does not overhang the edge of the table.

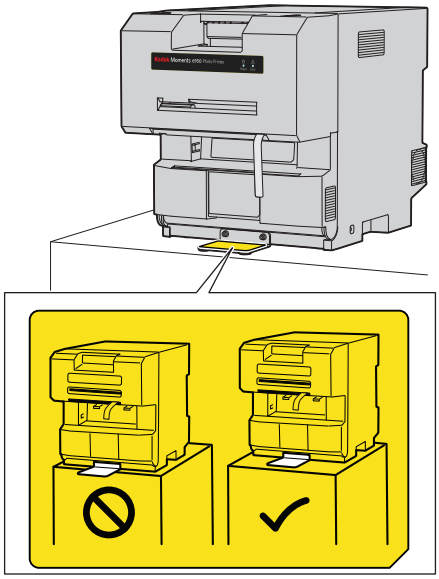

Acoustic Level

The operator position noise emission value is less than 70dB(A).

Disposal

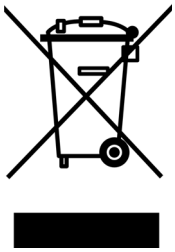

The product is designed to meet worldwide environmental requirements. Disposal of this material may be regulated due to environmental considerations. For disposal or recycling information, please contact your local authorities or, in the USA, visit: www.kodakalaris.com/go/recycle. The product packaging is recyclable.

In the European Union, this symbol indicates that when the last user wishes to discard this product, it must be sent to appropriate facilities for recovery and recycling. Contact your local Kodak Alaris representative or refer to www.kodakalaris.com/go/EHS for additional information on the collection and recovery programs available for this product.

EU Reach

Please consult www.kodakalaris.com/go/ehs for information about the presence of substances included on the candidate list according to article 59(1) of Regulation (EC) No. 1907/2006 (REACH).

EU Simplified Declaration of Conformance

Hereby, Kodak Alaris Inc. declares that this product is in compliance with Directive 2014/53/EU, Directive 2014/30/EU and 2014/35/EU to the degree to which they apply. The full text of the EU declaration of conformity is available at the internet address http://www.kodakalaris.com/go/EHS.

This is a Class A product. In a residential environment, this product may cause radio interference in which case the user may be required to take adequate measures.

a. frequency band(s) in which the radio equipment operates: 13.56 MHz
b. maximum radio-frequency power transmitted in the frequency band(s) in which the radio equipment operates: 200 mW

Appendix C: Regulatory Compliance

United States

FCC Statement: This equipment has been tested and found to comply with the limits for a Class A digital device, pursuant to part 15 of the FCC rules. These limits are designed to provide reasonable protection against harmful interference when the equipment is operated in a commercial environment. This equipment generates, uses and can radio frequency energy and, if not installed and used in accordance with the instruction manual, may cause harmful interference to radio communications. Operation of this equipment in a residential area is likely to cause harmful interference in which case the user will be required to correct the interference at his or her own expense.

Canada

This device complies with Industry Canada license-exempt RSS standard(s). Operation is subject to the following two conditions: (1) this device may not cause interference, and (2) this device may accept any interference, including interference that may cause undesired operation of the device.

Ce dispositif est conforme aux normes de RSS exemptes de licence d'Industrie Canada. L'opération est sujette aux deux conditions suivantes: (1) cet appareil ne peut pas causer d'interférences, et (2) ce dispositif peut accepter toute interférence, y compris les interférences pouvant causer un fonctionnement indésirable de l'appareil.

Korea

A 급 기기 (업무용 방송통신기자재)
이 기기는 업무용 (A 급) 전자파적합기기로서 판매자또는자용자는
이 점을 주의 하시기 바라며 ,
가정 외의자역에서 사용하는 것을 목적으로 합니다.

실내전용
이 제품은 실내 전용으로서 옥외에서 사용해서는 안됩니다

China

声明：本设备属 A 类产品。在住宅环境中，本产品可能会对无线电产生干扰，需要用户采取实际措施。

Declaration: This is a Class A product. In a domestic environment this product may cause radio interference in which case the user may need to perform practical action.

China RoHS

Environmental Protection Use Period (EPUP)

In China, this number indicates the time period (in years) within which any hazardous substances present in the product are not expected to be released such that there is risk to human health, property, or the environment. This value is assigned based on normal use of the product as described in the operating instructions.

环保使用期限（EPUP）

在中国大陆，该值表示电子信息产品中含有的有毒有害物质或元素在正常使用的条件下不会发生外泄或突变，用户使用此产品不会对环境造成严重污染或对人身、财产造成严重损害的期限（以年计）。

该值根据操作说明中所规定的产品正常使用条件而定。

Table of hazardous substance's name and concentration

Model Name: KODAK 6900 Photo Printer

Model Name: KODAK MOMENTS 6950 Photo Printer

环保使用期限（EPUP）

该记号中的数字(以年计)，是指该产品中包含的有害物质在通常的条件下不会泄露、或者是不会对环境、人身健康、财产造成严重影响的时间期限、不是产品质量保证的期限。

有毒有害物质或元素名称及含量标识表

部件名称	有毒有害物质或元素					
	铅 (Pb)	汞 (Hg)	镉 (Cd)	六价铬 (Cr(VI))	多溴联苯 (PBB)	多溴二苯醚 (PBDE)
压纸滚轮	×	○	○	○	○	○
电路板(含传感器)	×	○	○	○	○	○
AC适配器	×	○	○	○	○	○
热敏头	×	○	○	○	○	○
电机/风扇	×	○	○	○	○	○

○：表示该有毒有害物质在该部件所有均质材料中的含量均在 GB/T 26572 规定的限量要求以下。

×：表示该有毒有害物质至少在该部件的某一均质材料中的含量超出 GB/T 26572 规定的限量要求。

Brazil

Este equipamento não tem direito à proteção contra interferência prejudicial e não pode causar interferência em sistemas devidamente autorizados.

© 2025 Kodak Alaris Inc.
Kodak Alaris Inc.
336 Initiative Dr., Rochester, NY 14624
The Kodak trademark and Kodak trade dress are used under license from Eastman Kodak Company.
P/N 4J9960_EN